ZANOTTI

I
GB
F
D
E

CE

FZ213 - FZ214

FZ218 - FZ219 - FZ221

FZ228 - FZ229

LIBRETTO DI INSTALLAZIONE

INSTALLATION MANUAL

MANUEL D'INSTALLATION

MONTAGEANLEITUNG

LIBRO DE INSTALACIÓN

CONTENTS

1. Safety recommendations
1.1 Warranty
1.2 Maintenance
1.3 Safety information

2. Table of warning and attention plates

3. Models available
3.1 Main technical features

4. Installation instructions
4.1. Display description
4.2. Instructions for battery connection to feeder

5. Unit dimensions and fitting

6. Cooling circuit and connections details

7. Controller description
7.1 Display descriptions
7.2 Set point setting and changing
7.3 Programming parameters

8. Operations
8.1 Road operation
8.2 Stand by operation
8.3 Rating operation
8.4 Defrosting
8.5 Alarms and sigallings

9. Wiring Diagram

10. How to order spare parts

11. How to dispose of the packing

12 . How to dispose of the unit

13. Wiring Diagram

Thank you for choosing Uniblock. Please read these instructions carefully. They provide details and advice on the correct method of installing, using and maintaining this unit, in order to obtain maximum reliability, efficiency and long life.

1. Safety recommendations

When installing and using the unit please follow the recommendations listed here below.

- Installation shall be carried out in strict compliance with the diagrams and instructions supplied by the manufacturer.
- Damages due to improper connections are excluded.
- The electric system available where the unit is installed shall meet the relevant standards in force.
- Maintenance shall be effected by trained personnel or by the manufacturer according to the provisions supplied by EN378.

WARNING

Use safety gloves to protect your hands from possible cuts.

The user is strongly recommended to contact the manufacturer before attempting any intervention on the unit and any use not corresponding to the manufacturer's indications (in particular as for the field of application) and to enquire about the possible dangers and contra-indications connected with an improper use of the machine.

- The unit shall be used following these instructions and sticking to the destination of use indicated by the supplier. Any incorrect use can result in damages to the unit and represents a serious danger for people's health.

ATTENTION
The unit is not suitable for working in explosive environments.
Therefore the use of the unit in an explosion-dangerous atmosphere is absolutely forbidden.

ATTENTION
The unit is not suitable for working in salty environments. In such a case protect condenser and evaporator with appropriate means.

When maintenance involves operations on the refrigerating circuit, empty the system and let it reach the atmospheric pressure.

WARNING
Do not discharge the refrigerant in the atmosphere. It must be recovered by specialized technicians using suitable equipment.

- Quantity and quality of the refrigerant to be charged are indicated on the data plate.
- Do not use refrigerants of different kind (especially inflammable fluids, for example hydrocarbons) or air.
- Do not modify or alter the refrigerating circuit or its components (for example: welding on compressor body)
- The final user shall protect the system from external fire dangers.
- The unit has been designed to ensure a constant temperature control during transport. The cold storage room must be well insulated, provided with airtight door and optimal ventilation.

If the temperature of the product loaded is too high, the unit will not be able to cool it down.

For safe use of the unit, we suggest:

ATTENTION

- Do not use water or steam when cleaning as the electrical components may be damaged.
- Keep condenser and evaporator clean.
- Stand-by operation in enclosed places: ensure good ventilation to the condenser.
- Check that all screws are properly fixed and suitable to the purpose.
- When making holes in the unit or in the vehicle chassis, take care not to pierce the refrigerating pipings, the electrical wiring or any other vehicle component.
- Never close the compressor discharge valve when the unit is working.
- When working on the unit, use only flexible pipes of gauges in good conditions and avoid touching belts, pulley or fan.

WARNING

- Cleaning and maintenance are to be carried out with the unit switched OFF.
- After a running period, condenser and H/P discharge pipes are very hot; let them cool down before carrying out any operation.
- Handle fans, belts and pulleys carefully, with the unit OFF: prevent them from unexpected starting.
- When working near the coils (condenser and evaporator), pay attention not to cut oneself with the edges of the fins.
- When the unit is working, avoid putting hands near fans and belts.
- Refrigerant fluid handling has to be carried out taking all necessary precautions.
- Near a heating source refrigerant fluid produces an unpleasant smelling gas, irritating for the respiratory system.
- Never heat with fire a cooling cylinder containing refrigerant fluid.
- For any kind of manipulation on the unit, take all possible precautions
- Refrigerant in liquid state evaporates in contact with the atmosphere and freezes everything it touches.

- First aid in case of freezing:
  a) Cover the frozen part.
  b) Immediately warm the frozen part by dipping into cold water.
  c) If water is not available or impossible to use, gently wrap up the frozen part in a clean cloth.
  d) If some refrigerant fluid sprinkles on the eyes, immediately rinse with clean water; as a precaution consult a doctor.
  e) call a doctor

- Refrigerant oil.
  Synthetic types.
  Avoid prolonged or repeated contact with skin.
  Wash hands thoroughly after handling.

The unit starts automatically; keep away from moving components (belts, pulleys, fans).

1.1 Warranty

It is possible that certain options do not appear on the warranty, in this case contact our assistance service. The chiller structure must be evaluated by the manufacturer in order to determine its capacity to support the additional loads imposed by unit installation. These indications do not constitute an approval or a warranty on the part of **ZANOTTI S.p.A.** regarding the integrity of the chiller. It may happen that some of the adaptable elements described in the installation procedure do not correspond. If this should occur, contact our service office. In order to improve the quality of our products, **ZANOTTI S.p.A.** reserves the right to modify them without notice.

1.2 Maintenance

For the safety and upkeep of the refrigeration unit it is important that maintenance work is carried out following the timing indicated by the manufacturer (see maintenance table).
Maintenance work, as well as repairs, must be carried out by **ZANOTTI S.p.A.** authorized repair shops.

1.3 Safety information

WARNING

- If using the refrigeration unit in a closed environment, use only the "MAINS" function (keep the vehicle motor strictly turned off in order to avoid discharged gas poisoning).
- Ensure that there is a distance of at least 60 cm between the condenser and the ceiling, and adequate external air circulation.
- Cleaning operations on the refrigeration unit are carried out with the system turned off and after waiting for this to cool.
- To clean, use a cloth dampened with detergent.
- Do not use jets of water or steam under pressure as this could damage the system electrical parts.

MOVING PARTS

- As a rule, do not carry out maintenance work while the refrigeration system is in motion, and take all precautions to avoid unwanted start-ups.
- · During maintenance or repair operations, pay attention to moving parts such as fans, belts and pulleys.

HOT SURFACES

- Do not use the refrigeration unit with fairing or panels open or dismantled.
- Do not obstruct condensation airflow in any way.
- At the end of each operation period, the compressor, the condenser and the high pressure piping will be very hot. Avoid therefore any form of direct contact with these components during checking or repair stages until they have cooled down.
- Check regularly that dust, detritus or foreign bodies do not block the air circulation around the radiator core of the condenser and evaporator.

- If necessary, clean the parts in question.
- Do not let children operate the refrigeration system.

ELECTRIC SHOCKS

- Before opening the electric control box door, make sure that the power is turned off.
- Before carrying out any soldering work on the refrigeration system, disconnect the vehicle battery.
- Before carrying out soldering on the bodywork, ensure that the unit and vehicle batteries are disconnected, as are the charge and three-phase alternators.

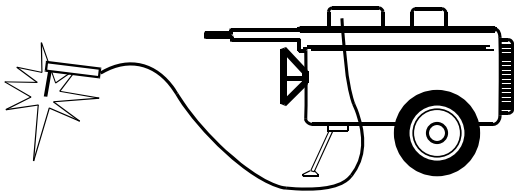

- Ensure that the electrical feed system has a ground connection device.
- Electrical systems in a residence or workshop must be connected to the refrigeration unit professionally by expert staff.

BATTERY MAINTENANCE

- Check the electrolyte level of the vehicle battery regularly. If necessary, add distilled water.
- If the battery is run-down, recharge it and, if it is dead, check that the power is adequate for the use required of it.
- Never start up your unit or vehicle with the help of a fast loader, so as not to risk damaging the electronic system of the unit or vehicle.

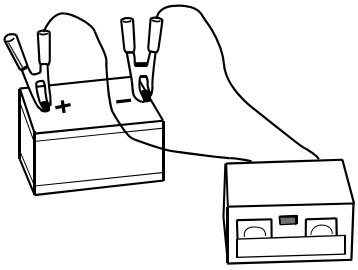

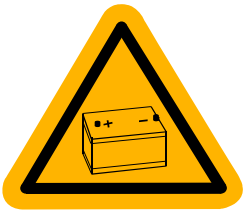

2. Table of warning and attention plates

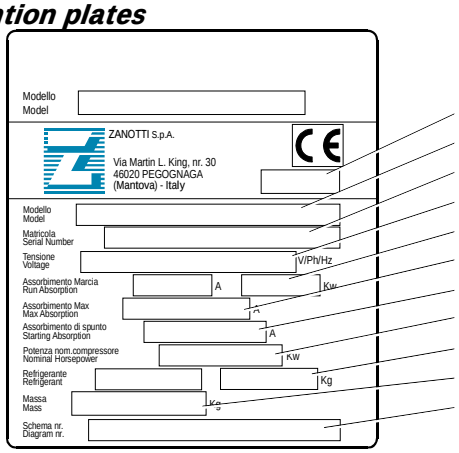

1) Year of manufacture
2) ZANOTTI unit code
3) Serial number
4) Voltage
5) Run Absorption
6) Max Absorption
7) Starting Absorption
8) Compressor's nominal power
9) Refrigerant : Type; Quantity
10) Mass of the unit
11) Electric diagram number

	Refrigerant
	Condensate drain line
	Attention: hot or cold parts
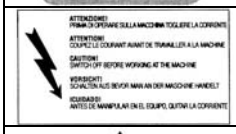	***Attention: switch off before operating on the unit.***
	Attention: danger of electrocution
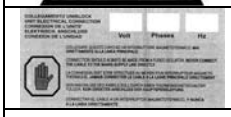	***Connect this cable to a circuit breaker, never to the main line directly.***
	Direction of rotation
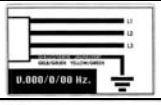	***Colours of supply cable wires***
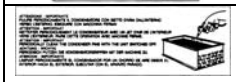	***Attention – important : clean the condenser periodically by blowing air from the inside outwards.*** ***Stop the unit before cleaning.***

The F10 series models have been designed to be fitted onto vehicles suitable for the distribution of easily perishable foodstuffs. They are split-type refrigerating units with automatic compressor.
FZ is suitable for product storage up to 0 °C, while F10M and FZ114 are suitable for product storage both in negative and positive temperature.

3. Models available

FZ 213-214-218-219-221-228-229
Cooling-cycle through 12V DC electric motor driven compressor, supplied by the vehicle battery or, alternatively, by a remote current feeder connected to a 230V/1ph./50Hz mains supply (vehicle alternator must supply at least 90A).

The set temperature is maintained automatically.

3.1 Main technical fetures:

FZ213			**Road**	**Main**
Road cooling capacity	T amb. 30 °C	T box 0 °C	2191 W	1324W
	T amb. 30 °C	T box -20 °C	1031 W	682W
Road compressor	145 cm³			
Condenser fan	helicoidal type 12 Vdc direct supply			
	Air volume 900 m³/h			
Evaporator fan	helicoidal type 12 Vdc direct supply			
	Air volume 660 m³/h			
Main compressor	22 cm³			
Electric motor (road)	supply 230V/1 ~ /50Hz			

FZ214			**Road**	**Main**
Road cooling capacity	T amb. 30 °C	T box 0 °C	2627 W	1704W
	T amb. 30 °C	T box -20 °C	1377 W	716W
Road compressor	146 cm³			
Condenser fan	helicoidal type 12 Vdc direct supply			
	Air volume 850 m³/h			
Evaporator fan	helicoidal type 12 Vdc direct supply			
	Air volume 630 m³/h			
Main compressor	87 cm³			
Electric motor (road)	supply 230/1 ~ /50Hz o 400/3N ~ /50 Hz			

FZ218			**Road**	**Main**
Road cooling capacity	T amb. 30 °C	T box 0 °C	1780 W	1560W
	T amb. 30 °C	T box –20 °C	940 W	830W
Road compressor	87 cm³			
Condenser fan	helicoidal type 12 Vdc direct supply			
	Air volume 850 m³/h			
Evaporator fan	helicoidal type 12 Vdc direct supply			
	Air volume 1400 m³/h			
Main compressor	87 cm³			
Electric motor (road)	supply 230/1 ~ /50Hz o 400/3N ~ /50 Hz			

FZ219			**Road**	**Main**
Road cooling capacity	T amb. 30 °C	T box 0 °C	2830W	1661W
	T amb. 30 °C	T box –20 °C	1377W	878W
Road compressor	131 cm³			
Condenser fan	helicoidal type 12 Vdc direct supply			
	Air volume 850 m³/h			
Evaporator fan	helicoidal type 12 Vdc direct supply			
	Air volume 2300 m³/h			
Main compressor	87 cm³			
Electric motor (mains)	supply 230/1 ~ /50Hz o 400/3N ~/50 Hz			

FZ221		Road	Mains
Cooling capacity	T amb. 30 °C T box 0 °C	2879 W	2023 W
	T amb. 30 °C T box –20 °C	1692 W	842 W
Road compressor	146 cm3 displacement		
Condenser fan	helicoidal type 12 Vcc o 24 Vcc direct supply		
	air volume 2000 m3/h		
evaporator fan	helicoidal type 12 Vcc o 24 Vcc direct supply		
	air volume 1150 m3/h		
mains compressor	87 cm3 displacement		
mains electric motore	230V / 1~ /50Hz 6,1 A 2 HP 1,5 Kw		
(road oper.)	400V / 3N~ /50Hz 3,5 A 2 HP 1,5 Kw		

FZ228		Road	Main
Road cooling capacity	T amb. 30 °C T box 0 °C	3174 W	2352W
	T amb. 30 °C T box –20 °C	1793 W	1169W
Road compressor	146 cm³		
Condenser fan	helicoidal type 12 Vdc direct supply		
	Air volume 2000 m³/h		
Evaporator fan	helicoidal type 12 Vdc direct supply		
	Air volume 1150 m³/h		
Main compressor	87 cm³		
Electric motor (mains)	supply 230/1 ~ /50Hz o 400/3N ~/50 Hz		

FZ229		Road	Main
Road cooling capacity	T amb. 30 °C T box 0 °C	3732W	2570W
	T amb. 30 °C T box –20 °C	2085W	1171W
Road compressor	145 cm³		
Condenser fan	helicoidal type 12 Vdc direct supply		
	Air volume 1350 m³/h		
Evaporator fan	helicoidal type 12 Vdc direct supply		
	Air volume 1350 m³/h		
Main compressor	92 cm³		
Electric motor (mains)	supply 230/1 ~ /50Hz o 400/3N ~/50 Hz		

4. Fitting compressor mechanical Kit on the road

See instructions for use supplied with Kit
This fitting must be carried out first.

Road compressor

In order to carry out installation correctly, check the components, see list of accessories.
Then proceed, following the instructions below.

Components

- Condenser (complete with electric control box)
- Evaporator
- Control box

LIST OF ACCESSORIES:

• Installation Kit FZ213-214-218-221 Cod.1KNS002
• Installation Kit FZ219 Cod. 1KNS003
• Installation Kit FZ228-229 Cod.1KNS004
• Electrical mains connection Kit 213/214/218/219/228T/229 Cod.1KCR003
• Electrical mains connection Kit 214/218/219/228M/229 Cod.1KCR004
• Electrical mains connection Kit 213 Cod.1KCR014
• Electrical road connection Kit 213/218/219/228/229 Cod.1KCS002
• Oil separator Kit FZ Cod. 1KSP001
• Refrigerator connection Kit

Kit SFZ213 / SFZ214
installation

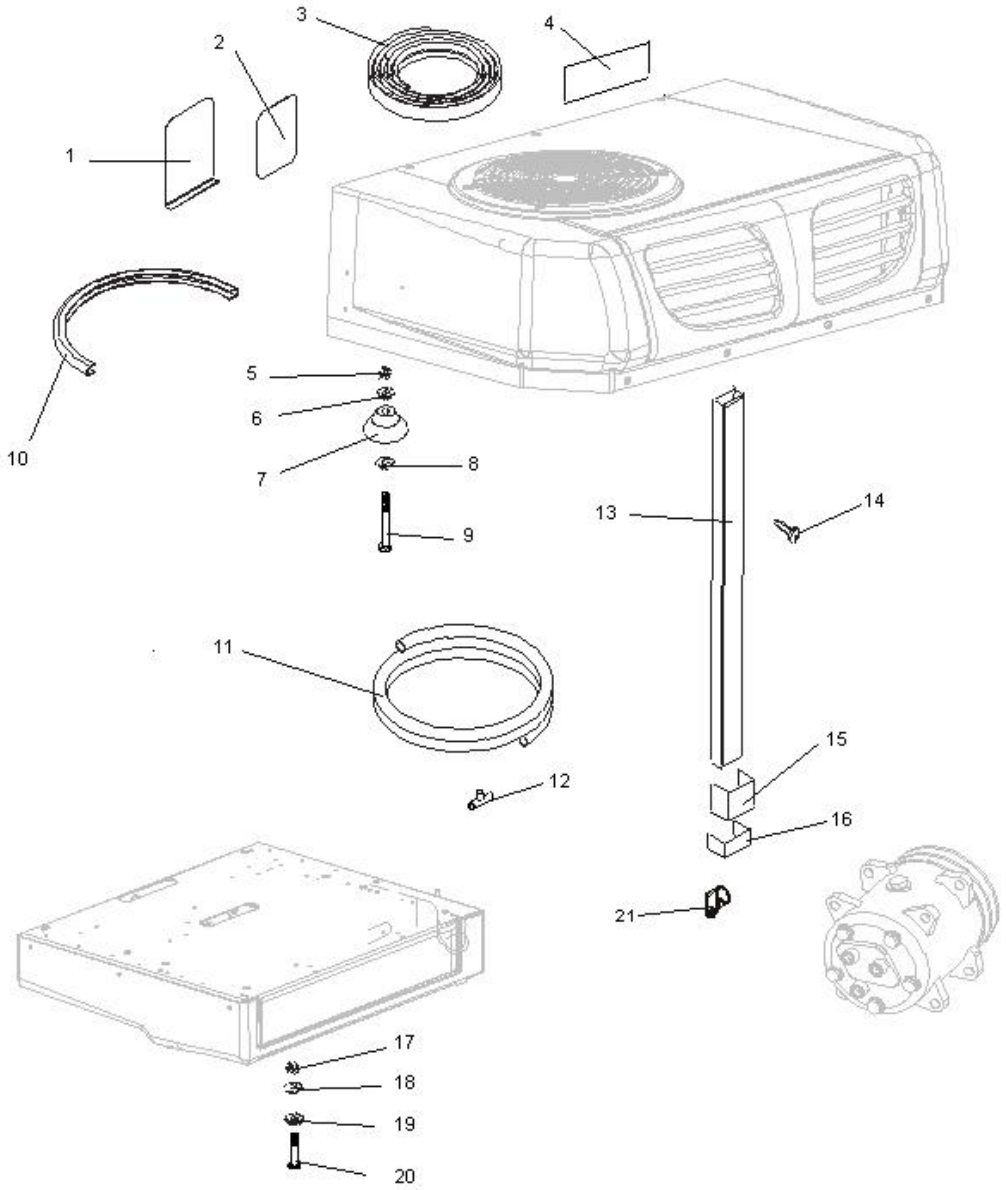

Component List								***KNS***
	Descrizione	*Codice*	*Q.tà*			*Descrizione*	*Codice*	*Q.tà*
1	Cable And Tube Pass. Ext. Closing	3001242/A	1		13	Pipe Trough	3CNL015	2
2	Cable And Tube Pass. Int. Closing	3001243/A	1		14	Self-Threading Screw 4,8X22	3VTE221	24
3	Gasket	3NST025	2.2		15	Internal Trough Bracket	3SFP012	4
4	Soldering Label	3ETA479	1		16	Trough Joint	3GNE002	1
5	Nut M 10	3DDO070	4		17	Nut M.8	3DDO077	4
6	Washer 10x20	3RND051	4		18	Washer 8x17	3RND045	4
7	Support Feet	3002042	4		19	Washer 8x32	3RND066	4
8	Washer	3RND065	4		20	Hexagonal Head Screw	3VTE327	4
9	Hexagonal Head Screw	3VTE318	4		21	Clamp With Screw	3FSC032	5
10	Gasket "U"	3GUR031	0.5					
11	Spiral Pipe Ø 16	3TBG043	5					

Compressor

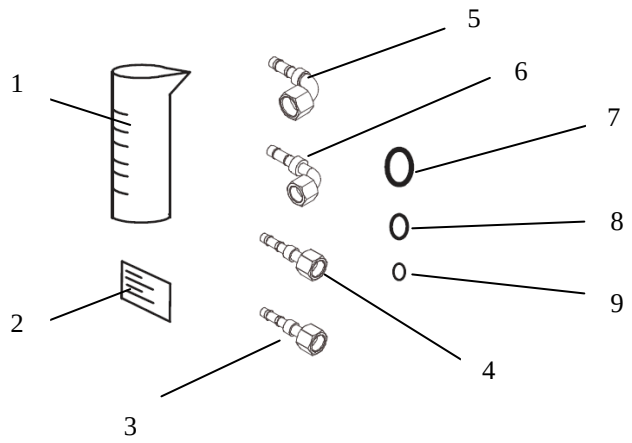

Component List			KCM
	Description	*Code*	*Q.ty*
1	Graduated Oil Container	3CNO001	1
2	Label	3ETA647	1
3	Union 7/8 s.10	3RCR099	1
4	Union 3/4 s.08	3RCR090	1
5	Union 7/8 s.10	3RCR071	1
6	Union 3/4 s.08	3RCR070	1
7	Gasket O-R 16	3GUR028	1
8	Gasket O-R 12	3GUR027	1
9	Gasket O-R 08	3GUR026	1

Lot manuli

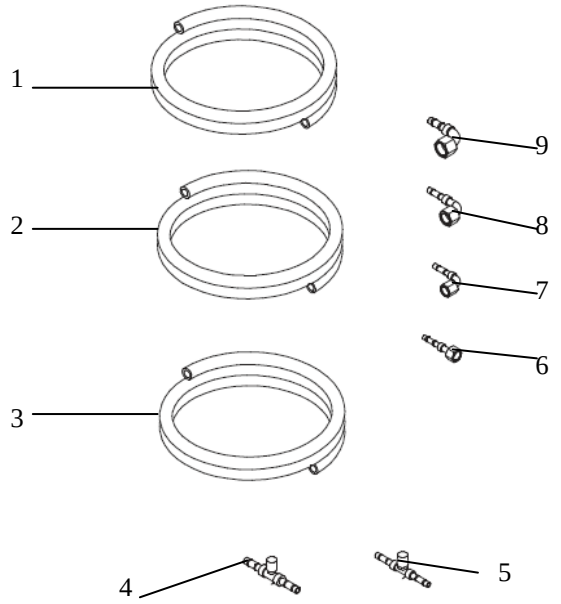

Component List			LTM
	Description	*Codice*	*Q.tà*
1	Frigostar Tube s.06	3TBG024	4
2	Frigostar Tube s.08	3TBG025	4,5
3	Frigostar Tube s.10	3TBG026	6,5
4	Joint s.08	3GNZ006	1
5	Joint s.10	3GNZ007	1
6	Union 11/16 s.06	3RCR103	1
7	Union 11/16 s.06	3RCR102	1
8	Union 1" s.10	3RCR100	1
9	Union 13/16 s.08	3RCR101	1

Electric mains connection

Component List			KCR
	Description	*Code*	*Q.ty*
1	Self-Threading Screw	3VTE221	1
2	Fixed Plug	3PSA015	1
3	Cover	3COP004	1
4	Non-Attached Plug	3SPN024	1
5	Fixed Plug	3SPN023	1
6	Washer	3RND007	1
7	Cable 3 X 2,5	3CV5100	1
8	Faston 6,3	3FFP005	1

Component List			KCS
9	Washer	3RND007	1
10	Screw 3,9x16	3VTE275	1
11	Fuse 40 A	3FSB173	1
12	Fuse Base	3BSF054	1
13	Battery Connect. Label Fz	3ETA494	1
14	Non ins. eye 6	3OCP011	1

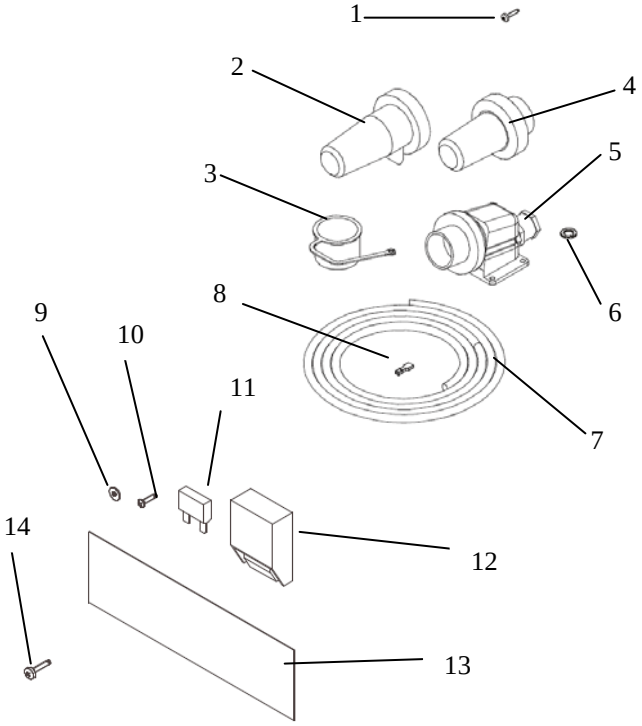

Kit SFZ218
installation

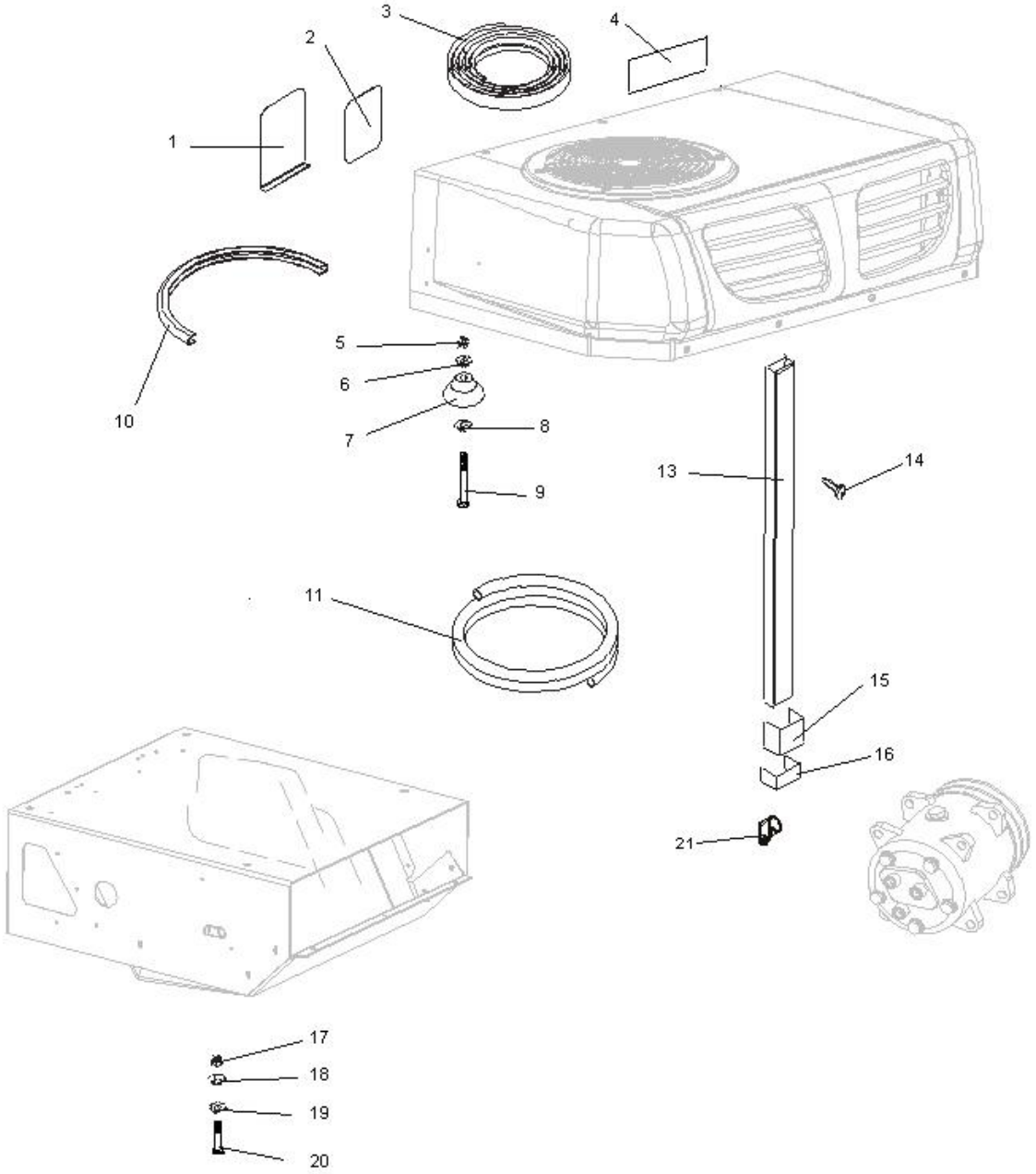

Component List								***KNS***
	Descrizione	*Codice*	*Q.tà*			*Descrizione*	*Codice*	*Q.tà*
1	Cable And Tube Pass. Ext. Closing	3001242/A	1		13	Pipe Trough	3CNL015	2
2	Cable And Tube Pass. Int. Closing	3001243/A	1		14	Self-Threading Screw 4,8X22	3VTE221	24
3	Gasket	3NST025	2.2		15	Internal Trough Bracket	3SFP012	4
4	Soldering Label	3ETA479	1		16	Trough Joint	3GNE002	1
5	Nut M 10	3DDO070	4		17	Nut M.8	3DDO077	4
6	Washer 10x20	3RND051	4		18	Washer 8x17	3RND045	4
7	Support Feet	3002042	4		19	Washer 8x32	3RND066	4
8	Washer	3RND065	4		20	Hexagonal Head Screw	3VTE327	4
9	Hexagonal Head Screw	3VTE318	4		21	Clamp With Screw	3FSC032	5
10	Gasket "U"	3GUR031	0.5					
11	Spiral Pipe Ø 16	3TBG043	5					

Compressor

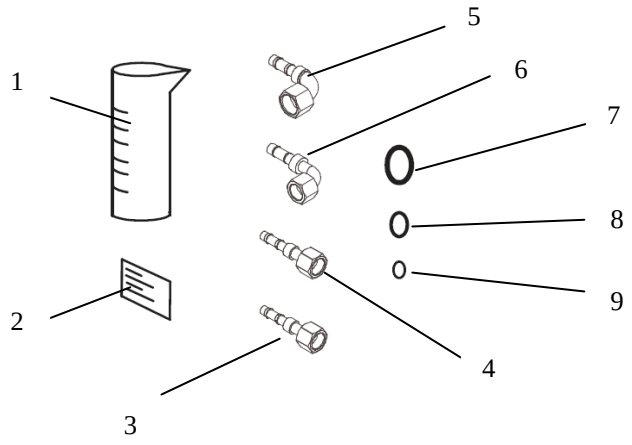

Component List		KCM	
	Description	*Codice*	*Q.tà*
1	Graduated Oil Container	3CNO001	1
2	Label	3ETA647	1
3	Union 7/8 s.10	3RCR099	1
4	Union 3/4 s.08	3RCR090	1
5	Union 7/8 s.10	3RCR071	1
6	Union 3/4 s.08	3RCR070	1
7	Gasket O-R 16	3GUR028	1
8	Gasket O-R 12	3GUR027	1
9	Gasket O-R 08	3GUR026	1

Lot manuli

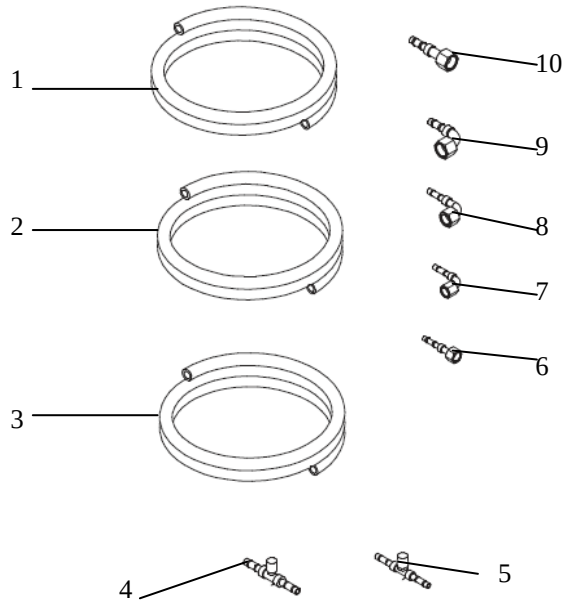

Component List		LTM	
	Description	*Codice*	*Q.tà*
1	Frigostar Tube s.06	3TBG024	4
2	Frigostar Tube s.08	3TBG025	4,5
3	Frigostar Tube s.10	3TBG026	6,5
4	Joint s.08	3GNZ006	1
5	Joint s.10	3GNZ007	1
6	Union 11/16 s.06	3RCR103	1
7	Union 11/16 s.06	3RCR102	1
8	Union 1'' s.10	3RCR100	1
9	Union 13/16 s.08	3RCR101	1
10	Union 1'' s.10	3RCR105	1

Electric mains connection

Component List		KCR	
	Description	*Codice*	*Q.tà*
1	Self-Threading Screw	3VTE221	1
2	Fixed Plug	3PSA015	1
3	Cover	3COP004	1
4	Non-Attached Plug	3SPN024	1
5	Fixed Plug	3SPN023	1
6	Washer	3RND007	1
7	Cable 3 X 2,5	3CV5100	1
8	Faston 6,3	3FFP005	1

Component List		KCS	
9	Washer	3RND007	1
10	Screw 3,9x16	3VTE275	1
11	Fuse 40 A	3FSB173	1
12	Fuse Base	3BSF054	1
13	Battery Connect. Label Fz	3ETA494	1
14	Non ins. eye 6	3OCP011	1

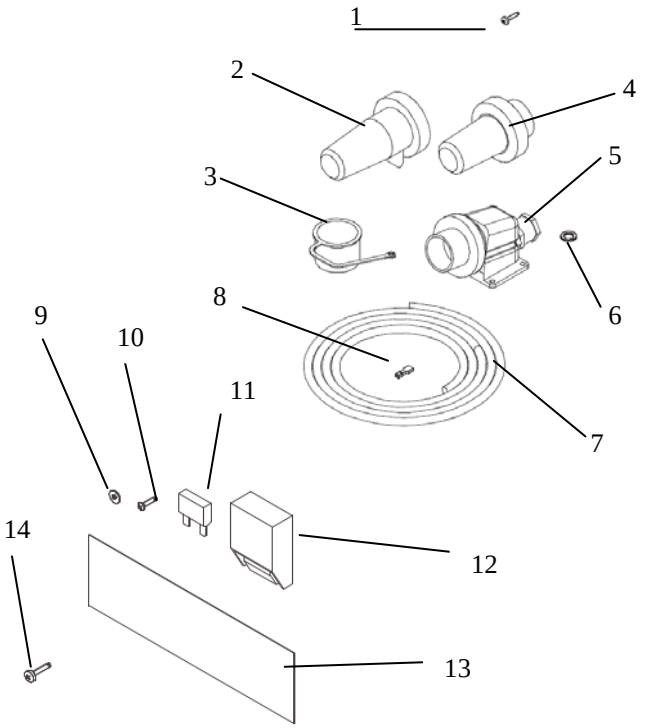

Kit SFZ219
installation

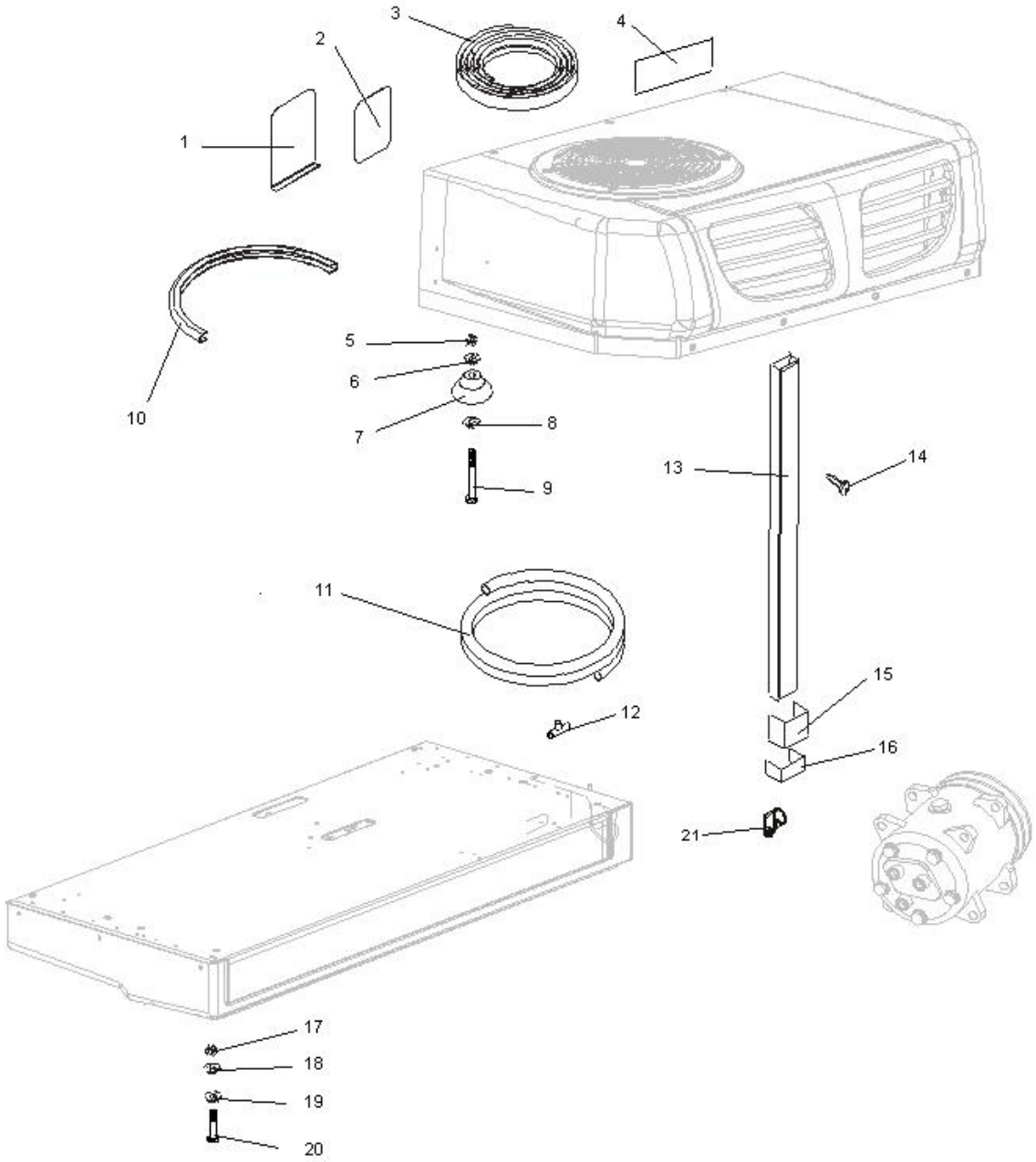

Component List								***KNS***
	Descrizione	*Codice*	*Q.tà*			*Descrizione*	*Codice*	*Q.tà*
1	Cable And Tube Pass. Ext. Closing	3001242/A	1		12	T-Union	3TEE007	1
2	Cable And Tube Pass. Int. Closing	3001243/A	1		13	Pipe Trough	3CNL015	2
3	Gasket	3NST025	2.2		14	Self-Threading Screw 4,8X22	3VTE221	24
4	Soldering Label	3ETA479	1		15	Internal Trough Bracket	3SFP012	4
5	Nut M 10	3DDO070	4		16	Trough Joint	3GNE002	1
6	Washer 10x20	3RND051	4		17	Nut M.8	3DDO077	4
7	Support Feet	3002042	4		18	Washer 8x17	3RND045	4
8	Washer	3RND065	4		19	Washer 8x32	3RND066	4
9	Hexagonal Head Screw	3VTE318	4		20	Hexagonal Head Screw	3VTE327	4
10	Gasket "U"	3GUR031	0.5		21	Clamp With Screw	3FSC032	5
11	Spiral Pipe Ø 16	3TBG043	5					

Compressor

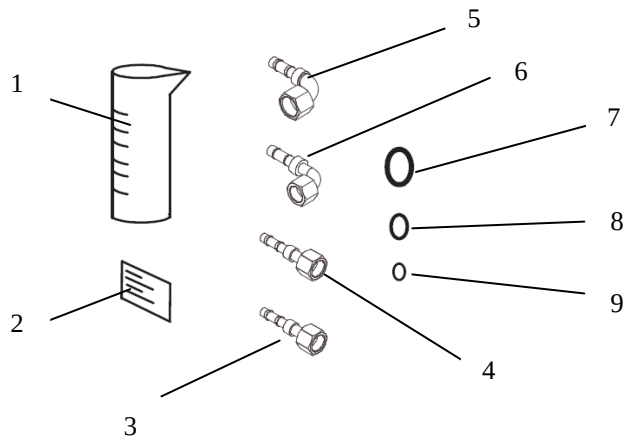

Component List			KCM
	Description	*Codice*	*Q.tà*
1	Graduated Oil Container	3CNO001	1
2	Label	3ETA647	1
3	Union 7/8 s.10	3RCR099	1
4	Union 3/4 s.08	3RCR090	1
5	Union 7/8 s.10	3RCR071	1
6	Union 3/4 s.08	3RCR070	1
7	Gasket O-R 16	3GUR028	1
8	Gasket O-R 12	3GUR027	1
9	Gasket O-R 08	3GUR026	1

Lot manuli

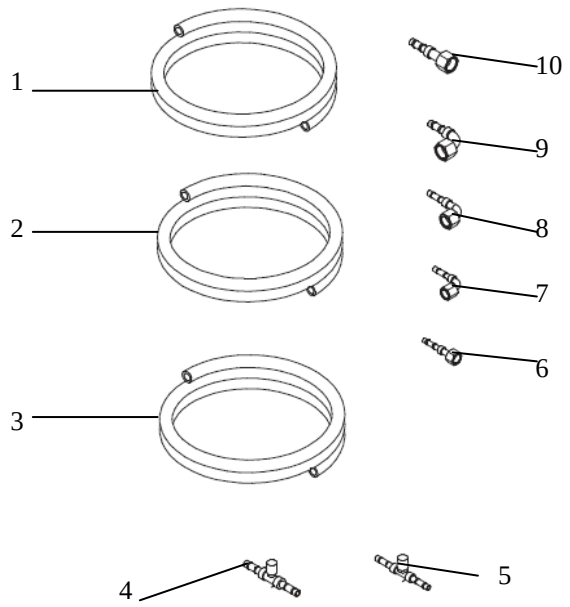

Component List			LTM
	Description	*Codice*	*Q.tà*
1	Frigostar Tube s.06	3TBG024	4
2	Frigostar Tube s.08	3TBG025	4,5
3	Frigostar Tube s.10	3TBG026	6,5
4	Joint s.08	3GNZ006	1
5	Joint s.10	3GNZ007	1
6	Union 11/16 s.06	3RCR103	1
7	Union 11/16 s.06	3RCR102	1
8	Union 1'' s.10	3RCR100	1
9	Union 13/16 s.08	3RCR101	1
10	Union 1'' s.10	3RCR105	1

Electric mains connection

Component List			KCR
	Description	*Codice*	*Q.tà*
1	Self-Threading Screw	3VTE221	1
2	Fixed Plug	3PSA015	1
3	Cover	3COP004	1
4	Non-Attached Plug	3SPN024	1
5	Fixed Plug	3SPN023	1
6	Washer	3RND007	1
7	Cable 3 X 2,5	3CV5100	1
8	Faston 6,3	3FFP005	1

Component List			KCS
9	Washer	3RND007	1
10	Screw 3,9x16	3VTE275	1
11	Fuse 40 A	3FSB173	1
12	Fuse Base	3BSF054	1
13	Battery Connect. Label Fz	3ETA494	1
14	Non ins. eye 6	3OCP011	1

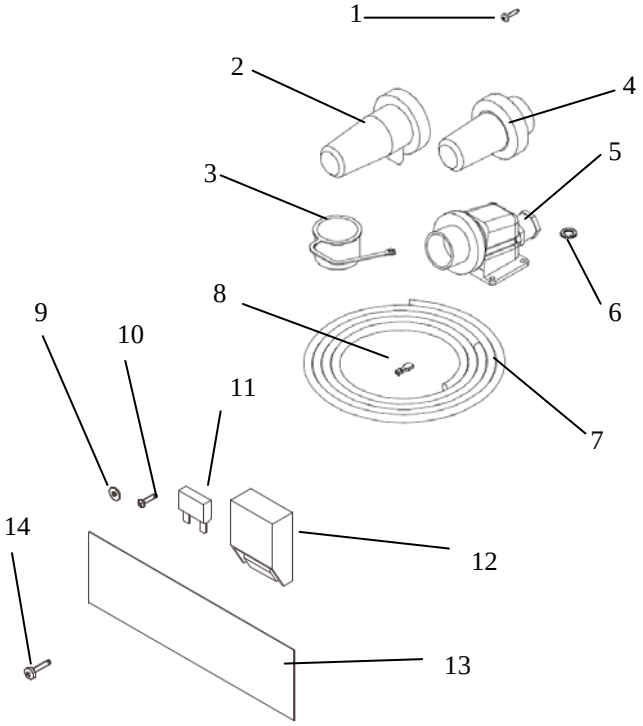

Kit SFZ221
installation

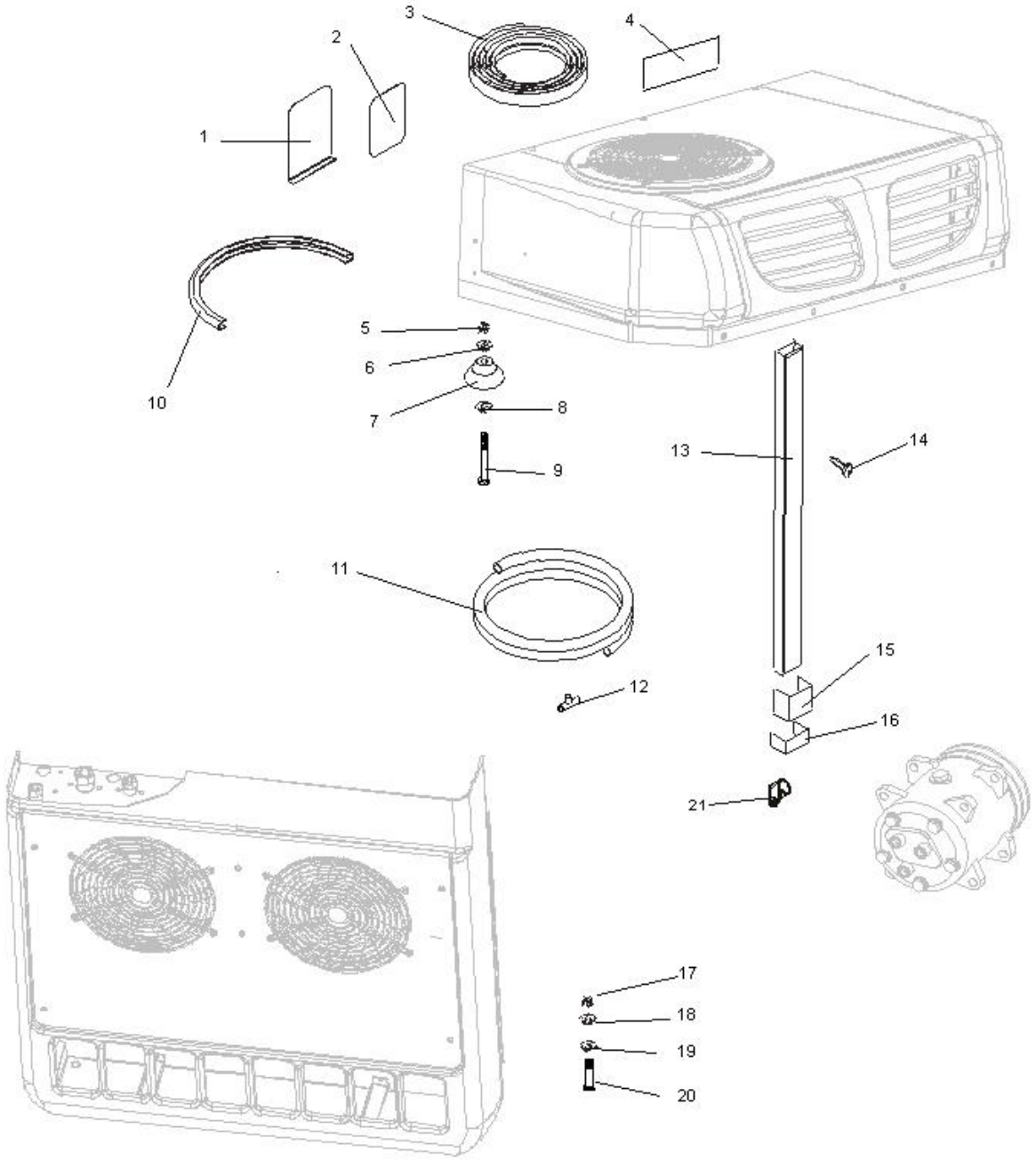

Component List							***KNS***	
	Descrizione	*Codice*	*Q.tà*			*Descrizione*	*Codice*	*Q.tà*
1	Cable And Tube Pass. Ext. Closing	3001242/A	1		12	T-Union	3TEE007	1
2	Cable And Tube Pass. Int. Closing	3001243/A	1		13	Pipe Trough	3CNL015	2
3	Gasket	3NST025	2.2		14	Self-Threading Screw 4,8X22	3VTE221	24
4	Soldering Label	3ETA479	1		15	Internal Trough Bracket	3SFP012	4
5	Nut M 10	3DDO070	4		16	Trough Joint	3GNE002	1
6	Washer 10x20	3RND051	4		17	Nut M.8	3DDO077	4
7	Support Feet	3002042	4		18	Washer 8x17	3RND045	4
8	Washer	3RND065	4		19	Washer 8x32	3RND066	4
9	Hexagonal Head Screw	3VTE318	4		20	Hexagonal Head Screw	3VTE327	4
10	Gasket "U"	3GUR031	0.5		21	Clamp With Screw	3FSC032	5
11	Spiral Pipe Ø 16	3TBG043	5					

Compressor

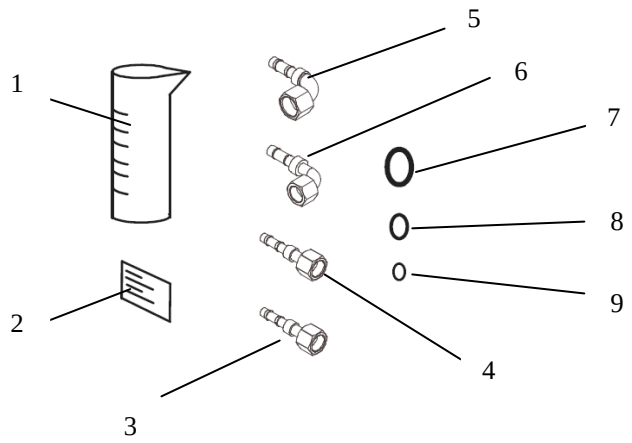

Component List		KCM	
	Description	*Codice*	*Q.tà*
1	Graduated Oil Container	3CNO001	1
2	Label	3ETA647	1
3	Union 7/8 s.10	3RCR099	1
4	Union 3/4 s.08	3RCR090	1
5	Union 7/8 s.10	3RCR071	1
6	Union 3/4 s.08	3RCR070	1
7	Gasket O-R 16	3GUR028	1
8	Gasket O-R 12	3GUR027	1
9	Gasket O-R 08	3GUR026	1

Lot manuli

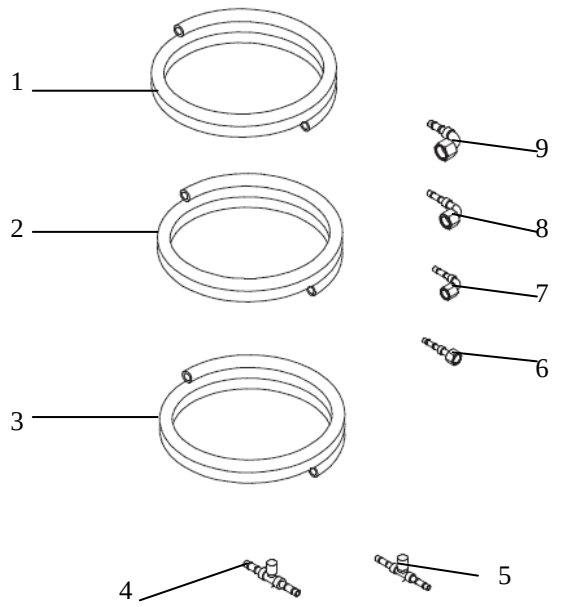

Component List		LTM	
	Description	*Codice*	*Q.tà*
1	Frigostar Tube s.06	3TBG024	4
2	Frigostar Tube s.08	3TBG025	4,5
3	Frigostar Tube s.10	3TBG026	6,5
4	Joint s.08	3GNZ006	1
5	Joint s.10	3GNZ007	1
6	Union 11/16 s.06	3RCR103	1
7	Union 11/16 s.06	3RCR102	1
8	Union 1" s.10	3RCR100	1
9	Union 13/16 s.08	3RCR101	1

Electric mains connection

Component List		KCR	
	Description	*Codice*	*Q.tà*
1	Self-Threading Screw	3VTE221	1
2	Fixed Plug	3PSA015	1
3	Cover	3COP004	1
4	Non-Attached Plug	3SPN024	1
5	Fixed Plug	3SPN023	1
6	Washer	3RND007	1
7	Cable 3 X 2,5	3CV5100	1
8	Faston 6,3	3FFP005	1

Component List		KCS	
9	Washer	3RND007	1
10	Screw 3,9x16	3VTE275	1
11	Fuse 40 A	3FSB173	1
12	Fuse Base	3BSF054	1
13	Battery Connect. Label Fz	3ETA494	1
14	Non ins. eye 6	3OCP011	1

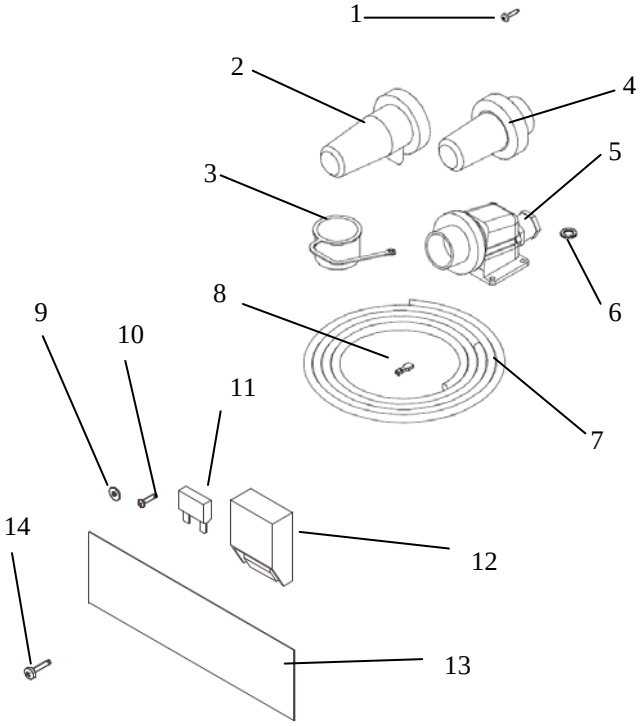

Kit SFZ228
installation

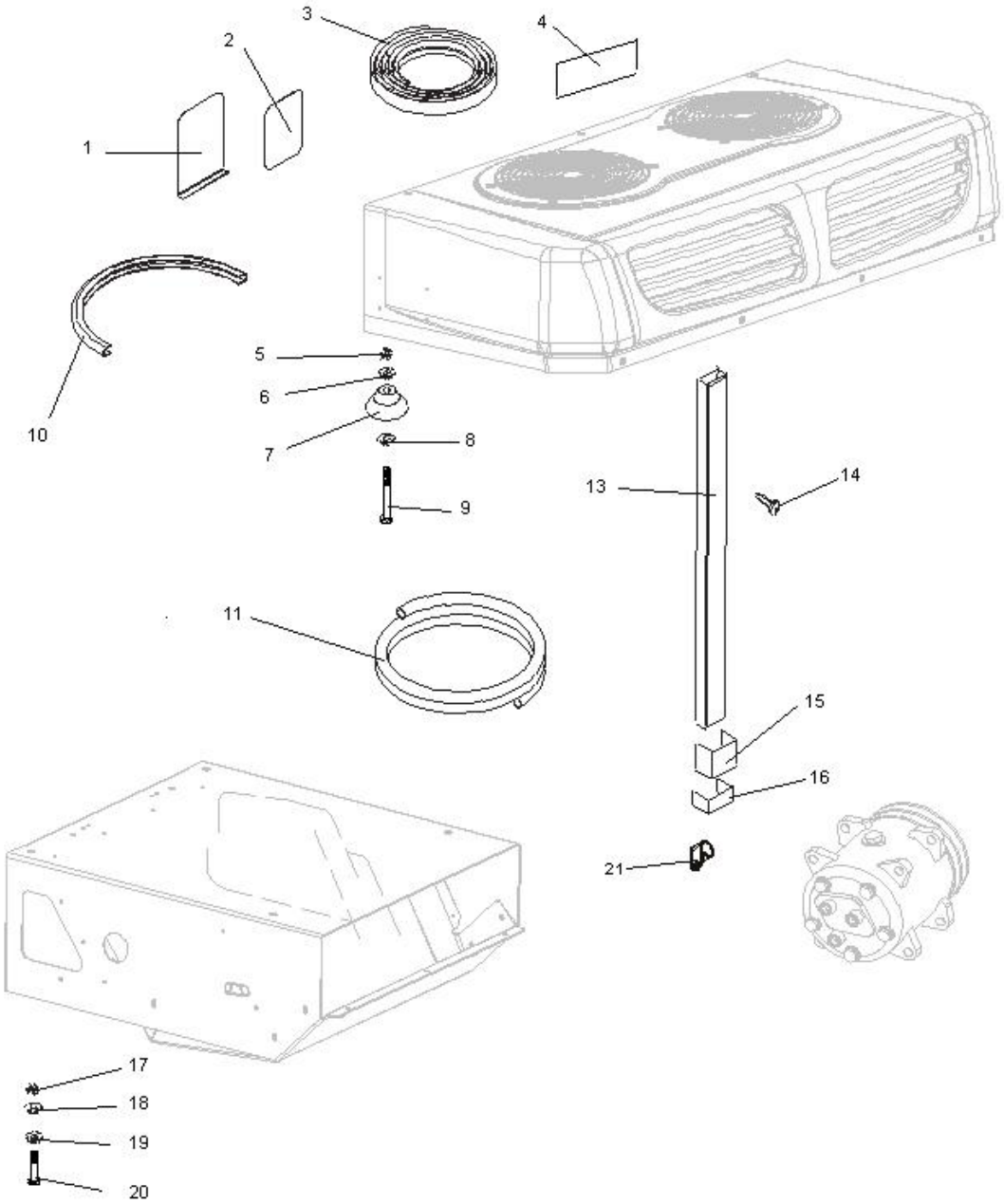

Component List								***KNS***
	Description	*Code*	*Q.ty*			*Description*	*Code*	*Q.ty*
1	Cable And Tube Pass. Ext. Closing	3001242/A	1		13	Pipe Trough	3CNL015	2
2	Cable And Tube Pass. Int. Closing	3001243/A	1		14	Self-Threading Screw 4,8X22	3VTE221	24
3	Gasket	3NST025	2.2		15	Internal Trough Bracket	3SFP012	4
4	Soldering Label	3ETA479	1		16	Trough Joint	3GNE002	1
5	Nut M 10	3DDO070	4		17	Nut M.8	3DDO077	4
6	Washer 10x20	3RND051	4		18	Washer 8x17	3RND045	4
7	Support Feet	3002042	4		19	Washer 8x32	3RND066	4
8	Washer	3RND065	4		20	Hexagonal Head Screw	3VTE327	4
9	Hexagonal Head Screw	3VTE318	4		21	Clamp With Screw	3FSC032	5
10	Gasket "U"	3GUR031	0.5					
11	Spiral Pipe Ø 16	3TBG043	5					

Compressor

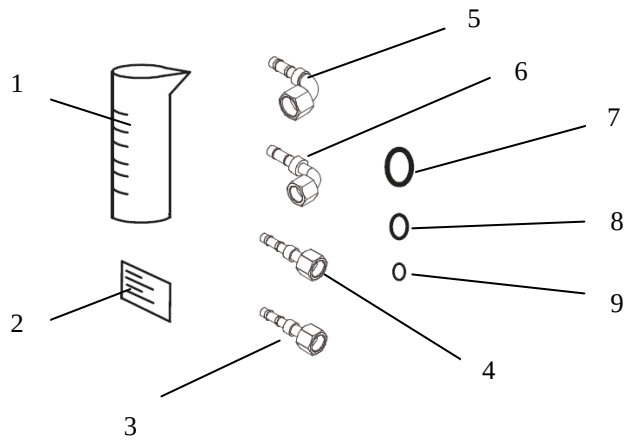

Component List			KCM
	Description	*Code*	*Q.ty*
1	Graduated Oil Container	3CNO001	1
2	Label	3ETA647	1
3	Union 7/8 s.10	3RCR099	1
4	Union 3/4 s.08	3RCR090	1
5	Union 7/8 s.10	3RCR071	1
6	Union 3/4 s.08	3RCR070	1
7	Gasket O-R 16	3GUR028	1
8	Gasket O-R 12	3GUR027	1
9	Gasket O-R 08	3GUR026	1

Lot manuli

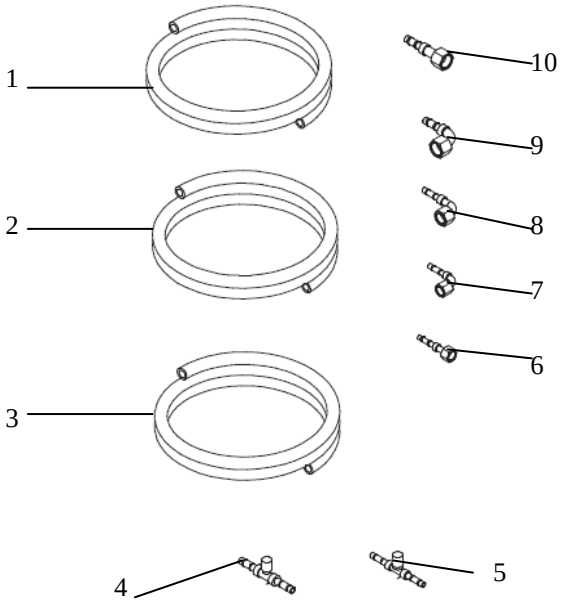

Component List			LTM
	Description	*Code*	*Q.ty*
1	Frigostar Tube s.06	3TBG024	4
2	Frigostar Tube s.08	3TBG025	4,5
3	Frigostar Tube s.10	3TBG026	6,5
4	Joint s.08	3GNZ006	1
5	Joint s.10	3GNZ007	1
6	Union 11/16 s.06	3RCR103	1
7	Union 11/16 s.06	3RCR102	1
8	Union 1'' s.10	3RCR100	1
9	Union 13/16 s.08	3RCR101	1
10	Union 1'' s.10	3RCR105	1

Electric mains connection

Component List			KCR
	Description	*Code*	*Q.ty*
1	Self-Threading Screw	3VTE221	1
2	Fixed Plug	3PSA015	1
3	Cover	3COP004	1
4	Non-Attached Plug	3SPN024	1
5	Fixed Plug	3SPN023	1
6	Washer	3RND007	1
7	Cable 3 X 2,5	3CV5100	1
8	Faston 6,3	3FFP005	1

Component List			KCS
9	Washer	3RND007	1
10	Screw 3,9x16	3VTE275	1
11	Fuse 40 A	3FSB173	1
12	Fuse Base	3BSF054	1
13	Battery Connect. Label Fz	3ETA494	1
14	Non ins. eye 6	3OCP011	1

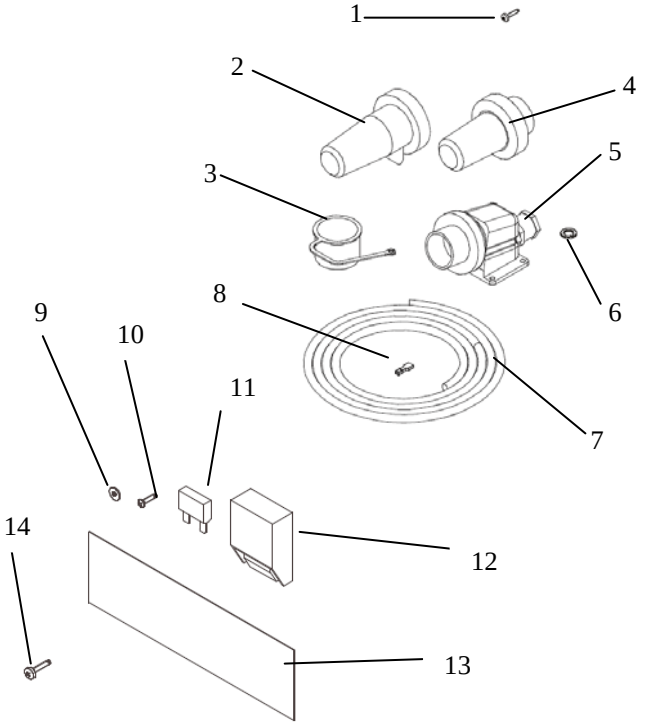

Kit SFZ229
installation

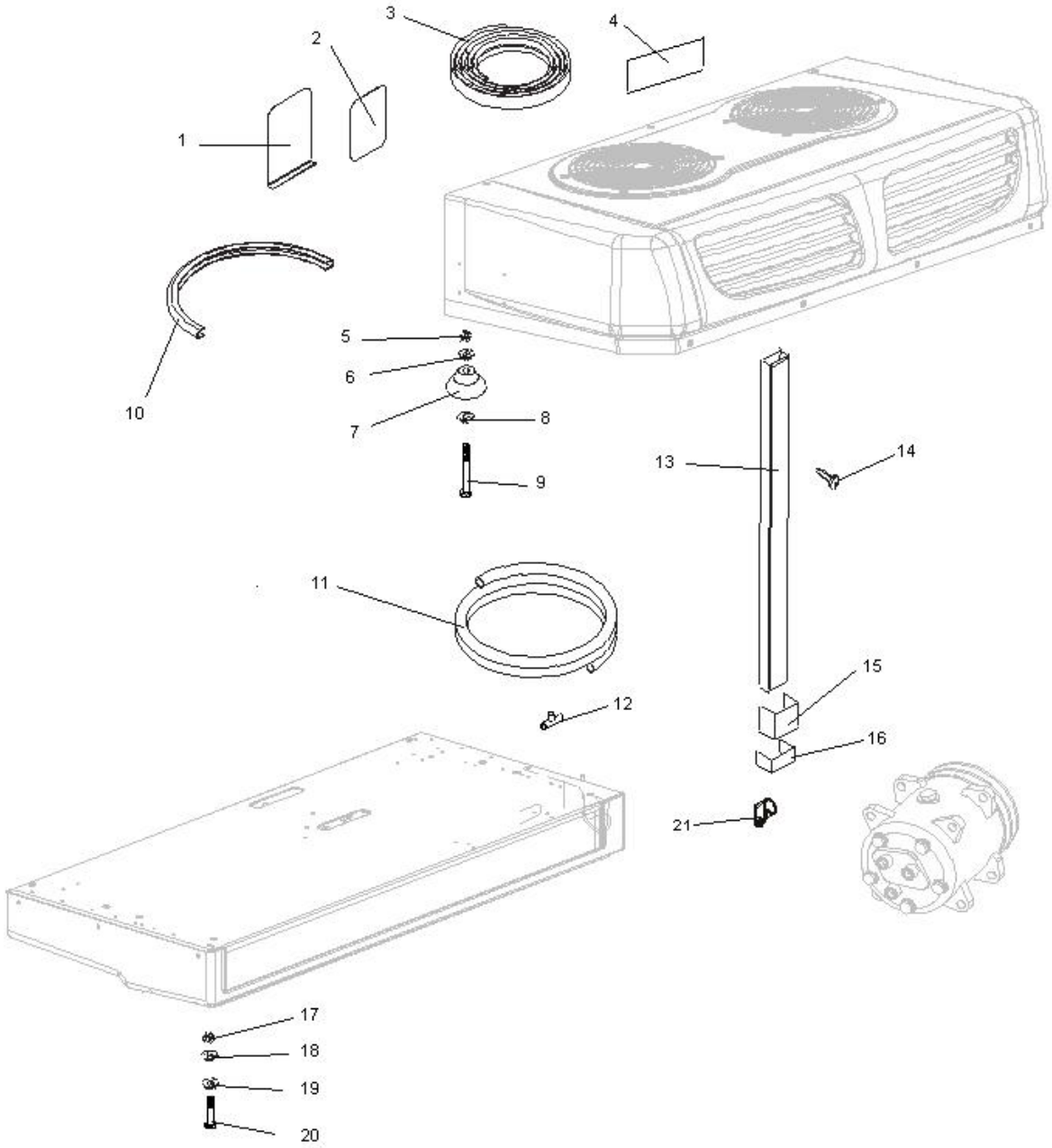

Component List								***KNS***
	Descrizione	*Codice*	*Q.tà*			*Descrizione*	*Codice*	*Q.tà*
1	Cable And Tube Pass. Ext. Closing	3001242/A	1		12	T-Union	3TEE007	1
2	Cable And Tube Pass. Int. Closing	3001243/A	1		13	Pipe Trough	3CNL015	2
3	Gasket	3NST025	2.2		14	Self-Threading Screw 4,8X22	3VTE221	24
4	Soldering Label	3ETA479	1		15	Internal Trough Bracket	3SFP012	4
5	Nut M 10	3DDO070	4		16	Trough Joint	3GNE002	1
6	Washer 10x20	3RND051	4		17	Nut M.8	3DDO077	4
7	Support Feet	3002042	4		18	Washer 8x17	3RND045	4
8	Washer	3RND065	4		19	Washer 8x32	3RND066	4
9	Hexagonal Head Screw	3VTE318	4		20	Hexagonal Head Screw	3VTE327	4
10	Gasket "U"	3GUR031	0.5		21	Clamp With Screw	3FSC032	5
11	Spiral Pipe Ø 16	3TBG043	5					

Compressor

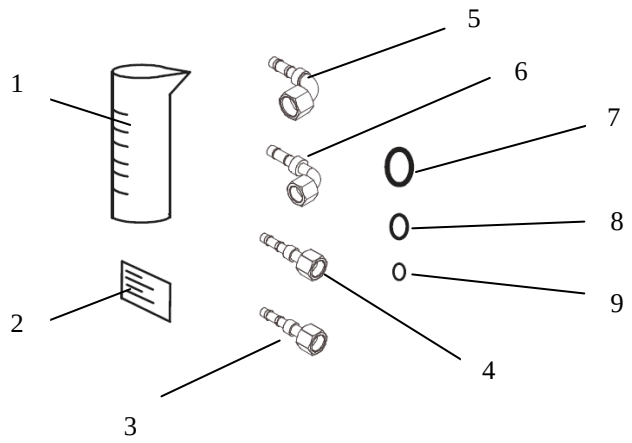

Component List			KCM
	Description	*Codice*	*Q.tà*
1	Graduated Oil Container	3CNO001	1
2	Label	3ETA647	1
3	Union 7/8 s.10	3RCR099	1
4	Union 3/4 s.08	3RCR090	1
5	Union 7/8 s.10	3RCR071	1
6	Union 3/4 s.08	3RCR070	1
7	Gasket O-R 16	3GUR028	1
8	Gasket O-R 12	3GUR027	1
9	Gasket O-R 08	3GUR026	1

Lot manuli

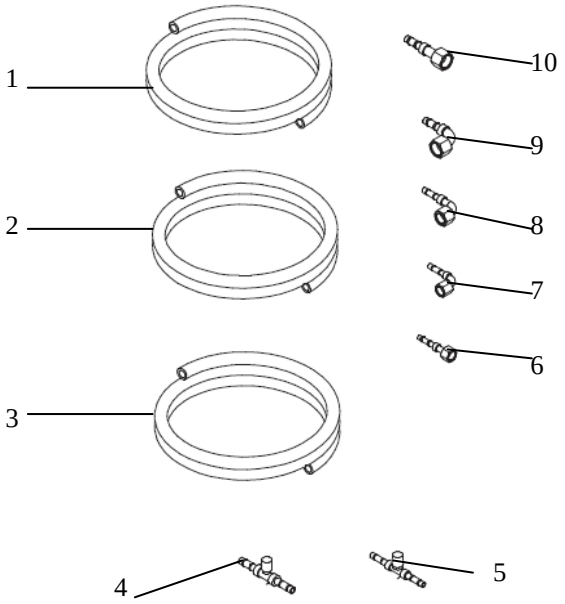

Component List			LTM
	Description	*Codice*	*Q.tà*
1	Frigostar Tube s.06	3TBG024	4
2	Frigostar Tube s.08	3TBG025	4,5
3	Frigostar Tube s.10	3TBG026	6,5
4	Joint s.08	3GNZ006	1
5	Joint s.10	3GNZ007	1
6	Union 11/16 s.06	3RCR103	1
7	Union 11/16 s.06	3RCR102	1
8	Union 1'' s.10	3RCR100	1
9	Union 13/16 s.08	3RCR101	1
10	Union 1'' s.10	3RCR105	1

Electric mains connection

Component List			KCR
	Description	*Codice*	*Q.tà*
1	Self-Threading Screw	3VTE221	1
2	Fixed Plug	3PSA015	1
3	Cover	3COP004	1
4	Non-Attached Plug	3SPN024	1
5	Fixed Plug	3SPN023	1
6	Washer	3RND007	1
7	Cable 3 X 2,5	3CV5100	1
8	Faston 6,3	3FFP005	1

Component List			KCS
9	Washer	3RND007	1
10	Screw 3,9x16	3VTE275	1
11	Fuse 40 A	3FSB173	1
12	Fuse Base	3BSF054	1
13	Battery Connect. Label Fz	3ETA494	1
14	Non ins. eye 6	3OCP011	1

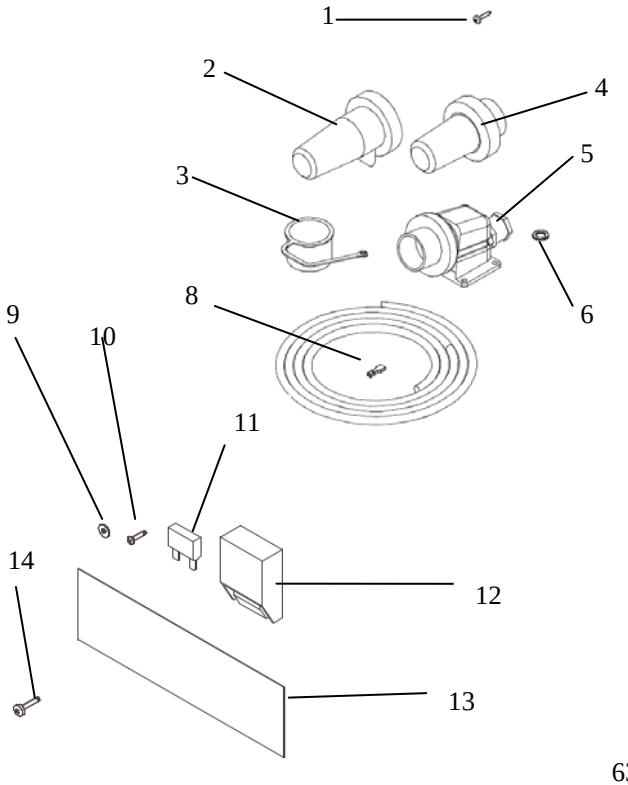

4.1 Unit installation procedure

On the split system we advise you to install the condenser and the evaporator in different points; more precisely:

· **The condenser can be installed** as "projecting part" (on the frontal wall of the van) or "on the roof" (on the roof of the vehicle).

· **The evaporator** is installed on the ceiling of the loading compartment.

Preparation of the fixing holes must be carried out using the special drilling templates.

N.B. Specific details for condenser fitting:

A) Check that the unit is supported adequately.
B) If support is not available, fill the gap under the position in which the condenser unit is to be installed with polyurethane foam.
For this, use aerosol cans of polyurethane foam for building use.
C) Use the fixing holes for filling.
D) Wait until the polyurethan foam has hardened (check the catalyzation time of the specific product), then clear the holes of foam residue.
E) Prepare four sections of the aluminium pipe supplied at a length below 4mm. of the fixture depth.
F) Insert the pipes into the holes, lock the fixture guys, then cover the fissures with silicon.

- The refrigeration unit control box is installed in the cabin, beside the steering wheel, in a position comfortable for the driver.

Avoid placement on the top part of the dashboard, as direct rays of sunlight may alter the value readings.

- In systems with road functioning and mains with power supply the battery connector and the refrigerator connector must be installed in the cabin in a position easy to connect.
- The aluminium channel supplied must be fitted to protect the rubber tubing of the cooling circuit and the electric cables.

N.B.: CHECK THAT THERE IS NO CONTACT BETWEEN THE ELECTRIC CABLE AND THE HIGH PRESSURE RUBBER TUBING OF THE REFRIGERATOR SYSTEM

- The system will work effectively if installation is carried out professionally:
- Make sure that the cooling circuit is free of moisture (carry out a vacuum for at least eight hours). Humidity can cause serious damage and system arrest.
- Check the type and quality of refrigerant fluid to put in the circuit.
- After putting in the refrigerant fluid, check the correct operation pressure of the system using the two high and low gauges.

Also check that the control devices (thermostat, pressure switch, etc) are working perfectly.

- Check that the cooling circuit does not present leaks of refrigerant fluid, no matter how minimal, as a leak could cause system arrest, even after months of operation.

FAILURE TO ADHERE TO THE PRESENT REGULATIONS CAN CAUSE FAULTS AND OPERATIONAL IRREGULARITIES, NOT COVERED BY THE WARRANTY.

5. Unit dimesions and fitting

FZ213

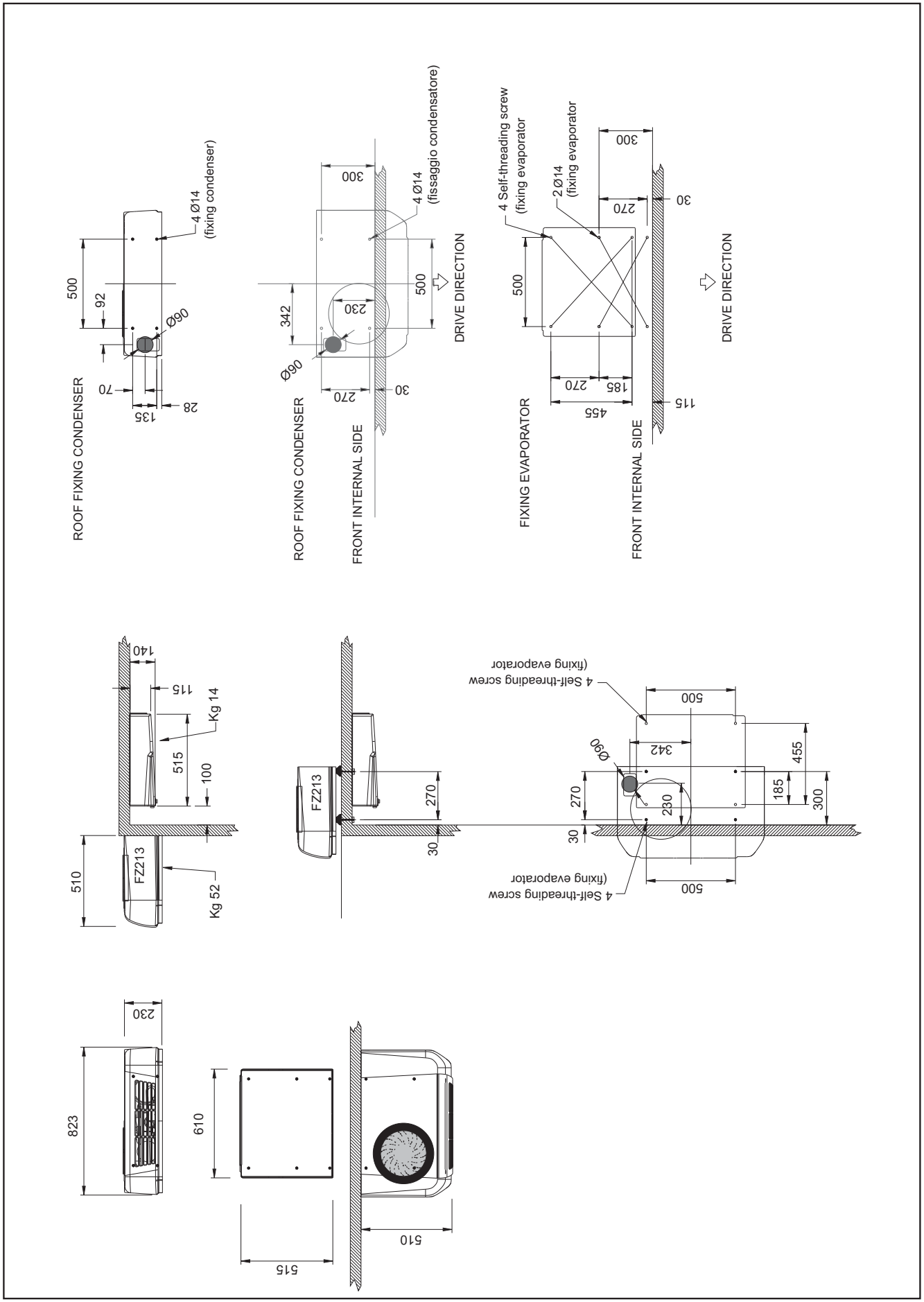

FZ214

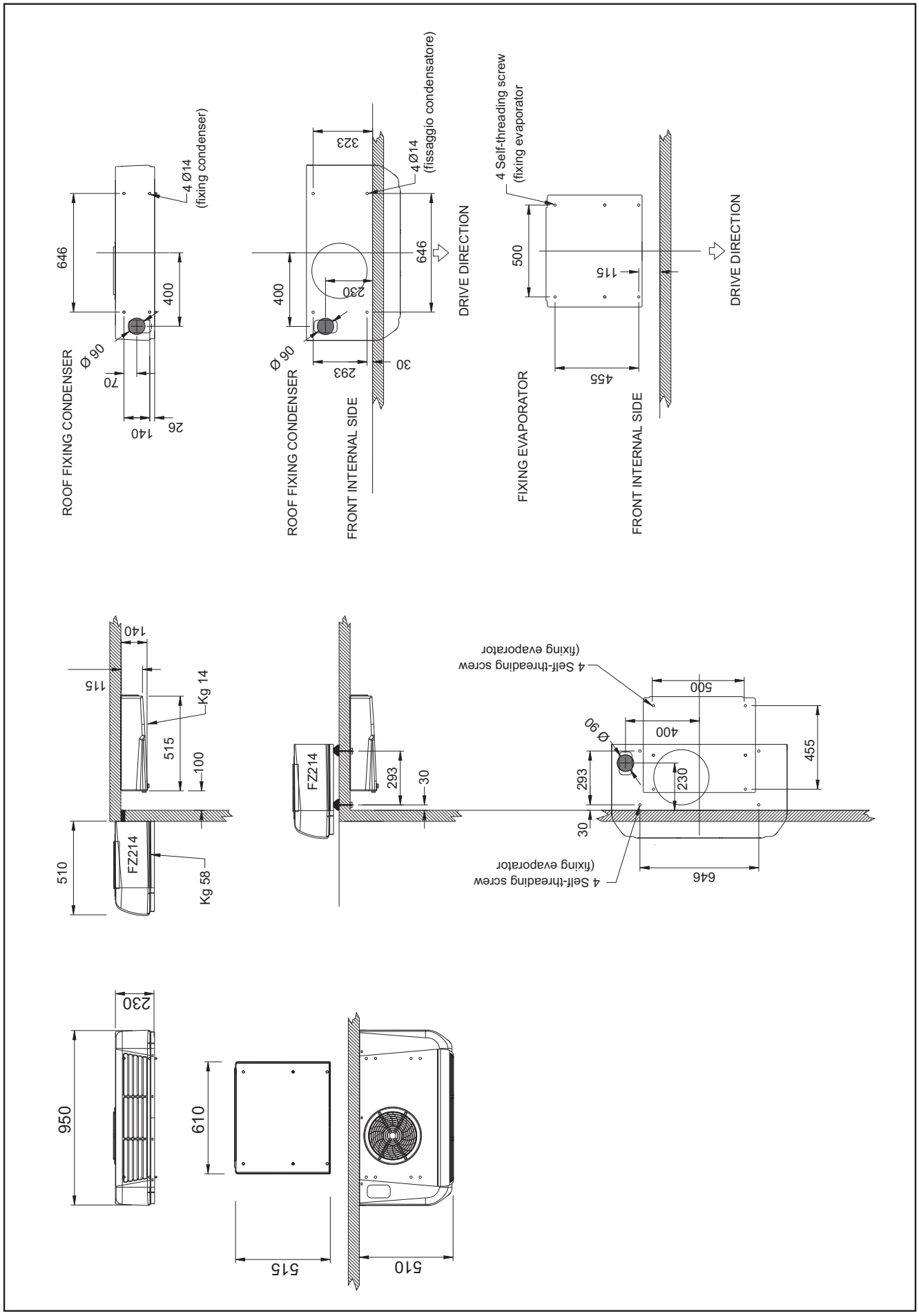
ROOF FIXING CONDENSER
4 Ø14
(fixing condenser)
646
400
Ø 90
70
140
26
ROOF FIXING CONDENSER
FRONT INTERNAL SIDE
4Ø14
(fissaggio condensatore)
323
646
400
230
Ø 90
293
30
DRIVE DIRECTION
FIXING EVAPORATOR
FRONT INTERNAL SIDE
4 Self-threading screw
(fixing evaporator
500
115
455
DRIVE DIRECTION
140
115
Kg 14
515
100
510
FZ214
Kg 58
FZ214
293
30
4 Self-threading screw
(fixing evaporator
500
400
Ø 90
293
230
455
30
646
4 Self-threading screw
(fixing evaporator
230
950
610
515
510

FZ218

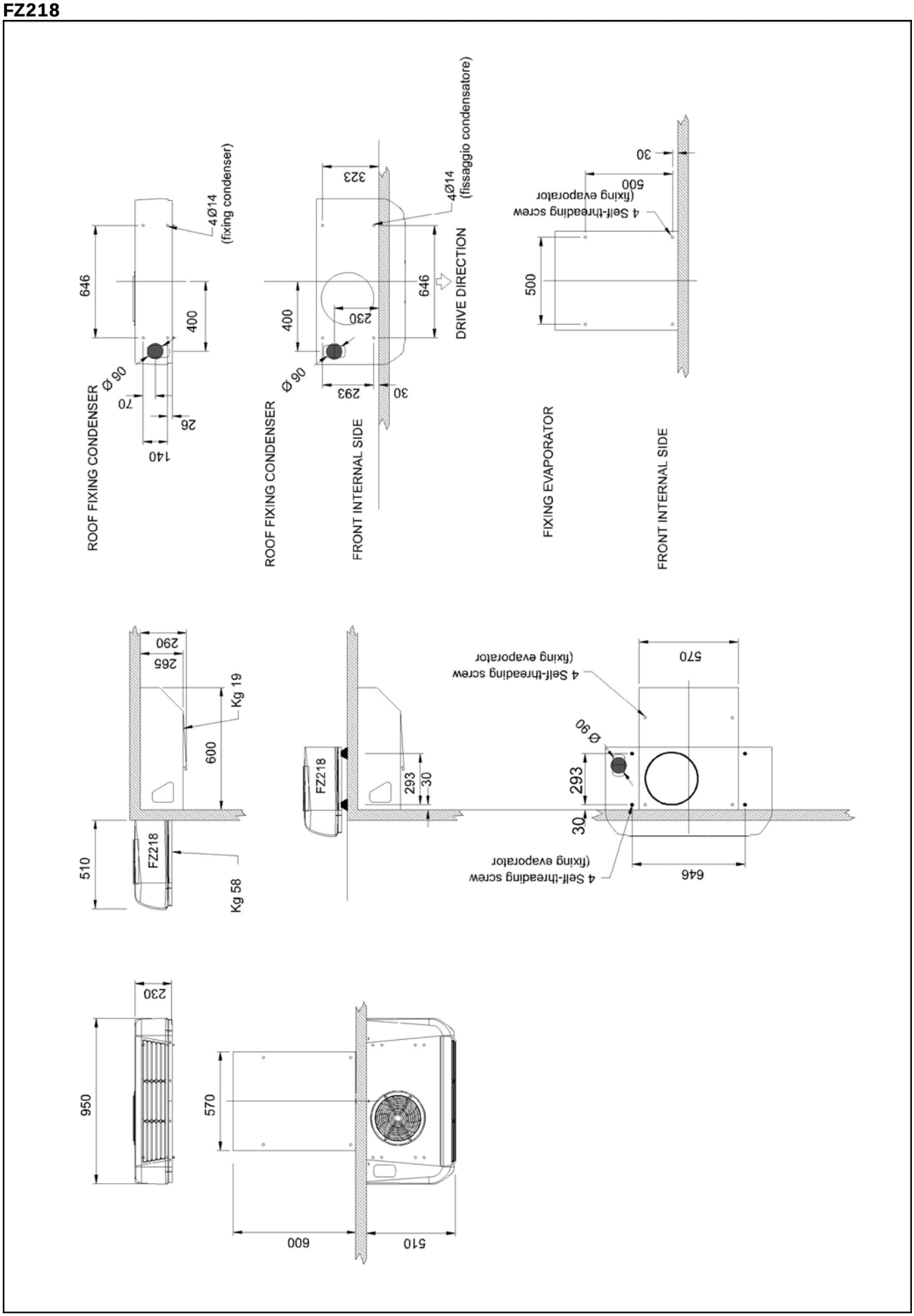
ROOF FIXING CONDENSER
4Ø14
(fixing condenser)
646
400
Ø 90
70
26
140
ROOF FIXING CONDENSER
FRONT INTERNAL SIDE
323
4Ø14
(fissaggio condensatore)
DRIVE DIRECTION
646
400
230
Ø 90
293
30
FIXING EVAPORATOR
FRONT INTERNAL SIDE
30
500
4 Self-threading screw
(fixing evaporator)
500
290
265
Kg 19
600
510
FZ218
Kg 58
FZ218
293
30
570
4 Self-threading screw
(fixing evaporator)
Ø 90
293
30
4 Self-threading screw
(fixing evaporator)
646
230
950
570
600
510

FZ219

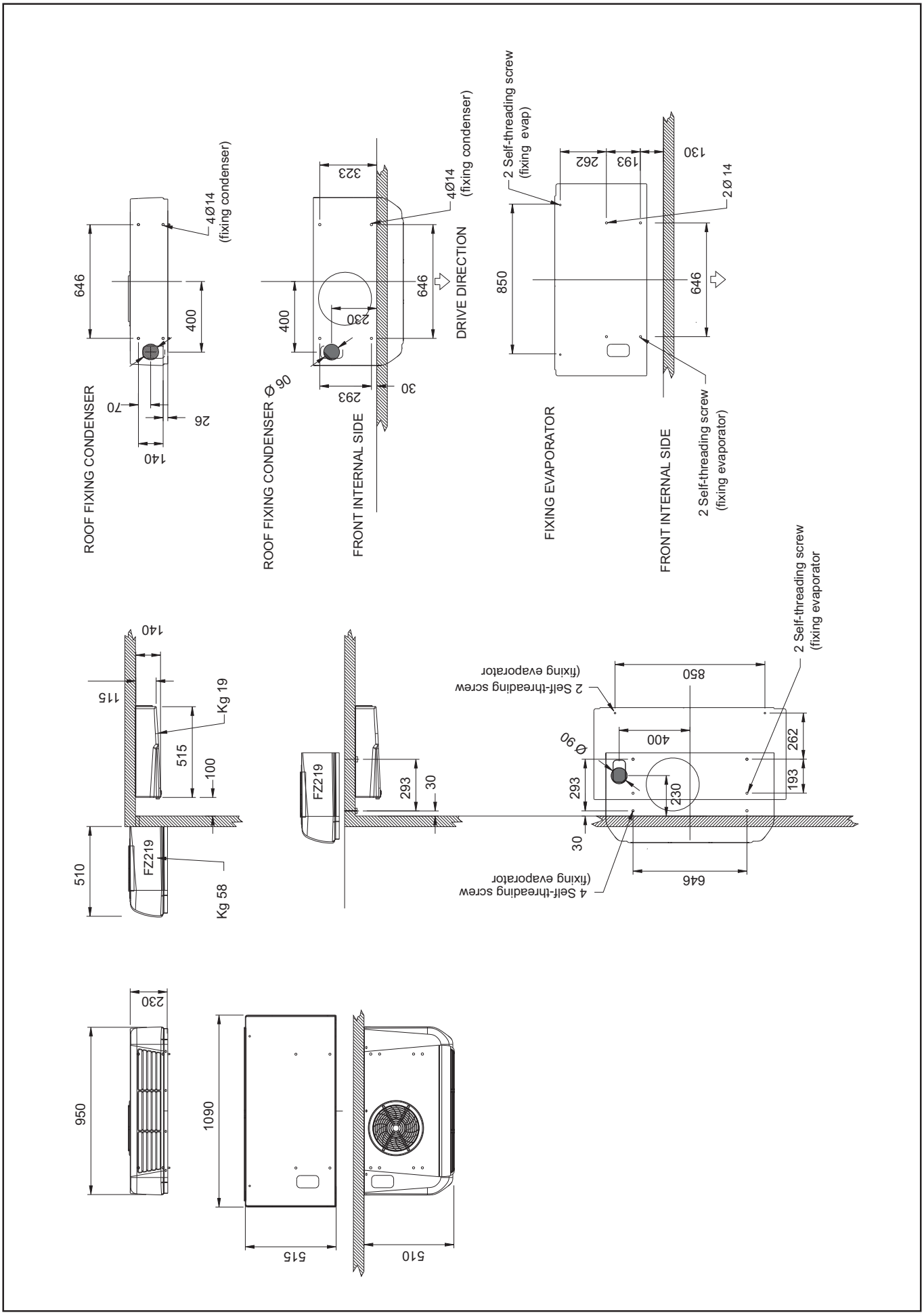
ROOF FIXING CONDENSER
4Ø14
(fixing condenser)
646
400
70
26
140
ROOF FIXING CONDENSER Ø 90
FRONT INTERNAL SIDE
323
4Ø14
(fixing condenser)
DRIVE DIRECTION
646
400
230
293
30
FIXING EVAPORATOR
2 Self-threading screw
(fixing evap)
850
262
193
130
2 Ø 14
FRONT INTERNAL SIDE
646
2 Self-threading screw
(fixing evaporator)
140
115
Kg 19
515
100
510
FZ219
Kg 58
FZ219
293
30
2 Self-threading screw
(fixing evaporator)
850
400
Ø 90
293
230
30
262
193
646
4 Self-threading screw
(fixing evaporator)
2 Self-threading screw
(fixing evaporator
950
230
1090
515
510

FZ221

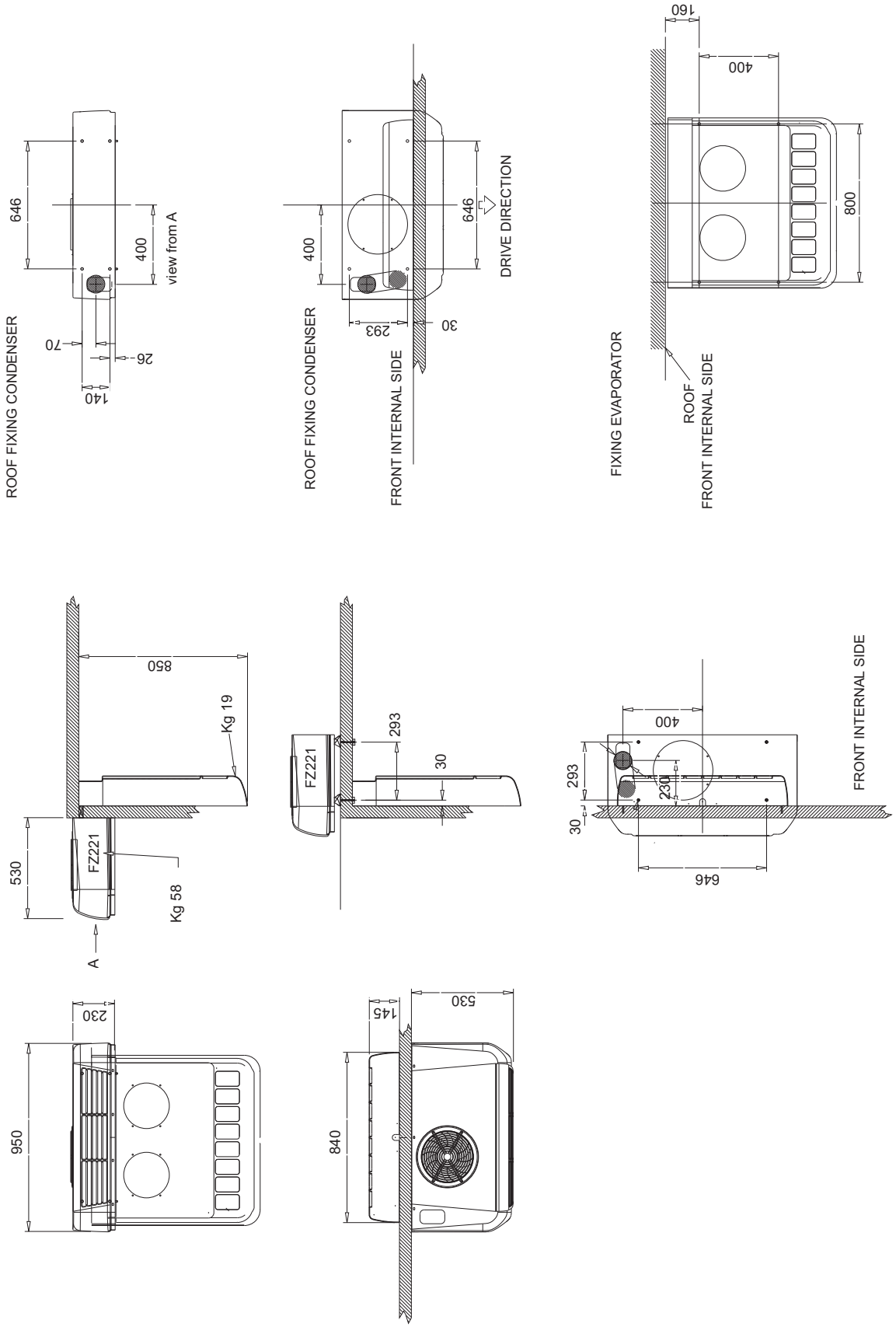
ROOF FIXING CONDENSER
646
400
view from A
70
26
140
ROOF FIXING CONDENSER
FRONT INTERNAL SIDE
400
646
DRIVE DIRECTION
293
30
FIXING EVAPORATOR
ROOF
FRONT INTERNAL SIDE
160
400
800
850
Kg 19
530
FZ221
Kg 58
A
FZ221
293
30
FRONT INTERNAL SIDE
400
293
230
30
646
230
950
530
145
840

FZ228

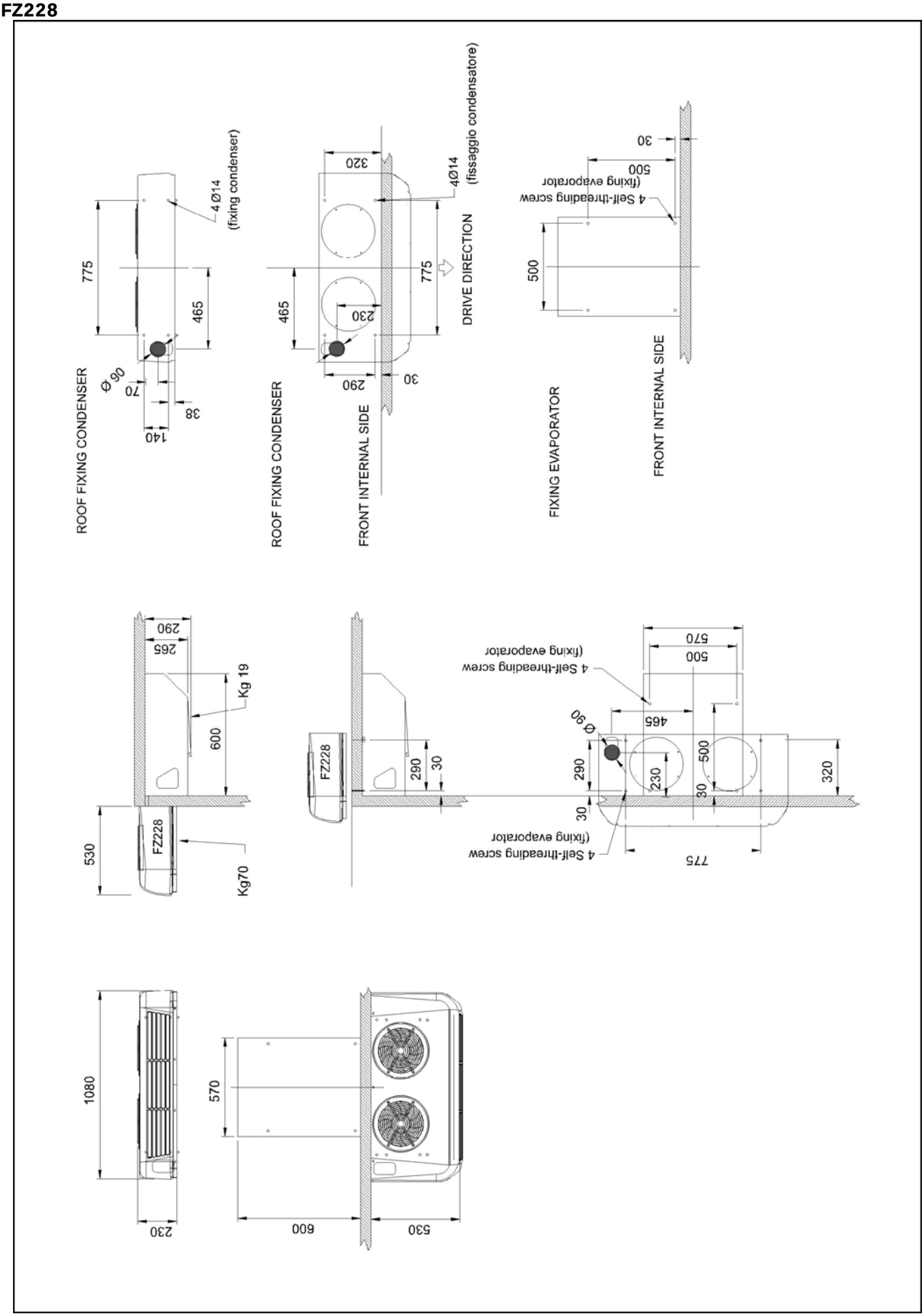
ROOF FIXING CONDENSER
4 Ø14
(fixing condenser)
775
465
Ø 90
70
38
140
ROOF FIXING CONDENSER
FRONT INTERNAL SIDE
320
4Ø14
(fissaggio condensatore)
DRIVE DIRECTION
465
230
775
290
30
FIXING EVAPORATOR
FRONT INTERNAL SIDE
30
500
4 Self-threading screw
(fixing evaporator)
500
265
290
Kg 19
600
530
FZ228
Kg70
FZ228
290
30
570
500
4 Self-threading screw
(fixing evaporator)
465
Ø 90
290
230
500
30
320
30
4 Self-threading screw
(fixing evaporator)
775
1080
230
570
600
530

FZ229

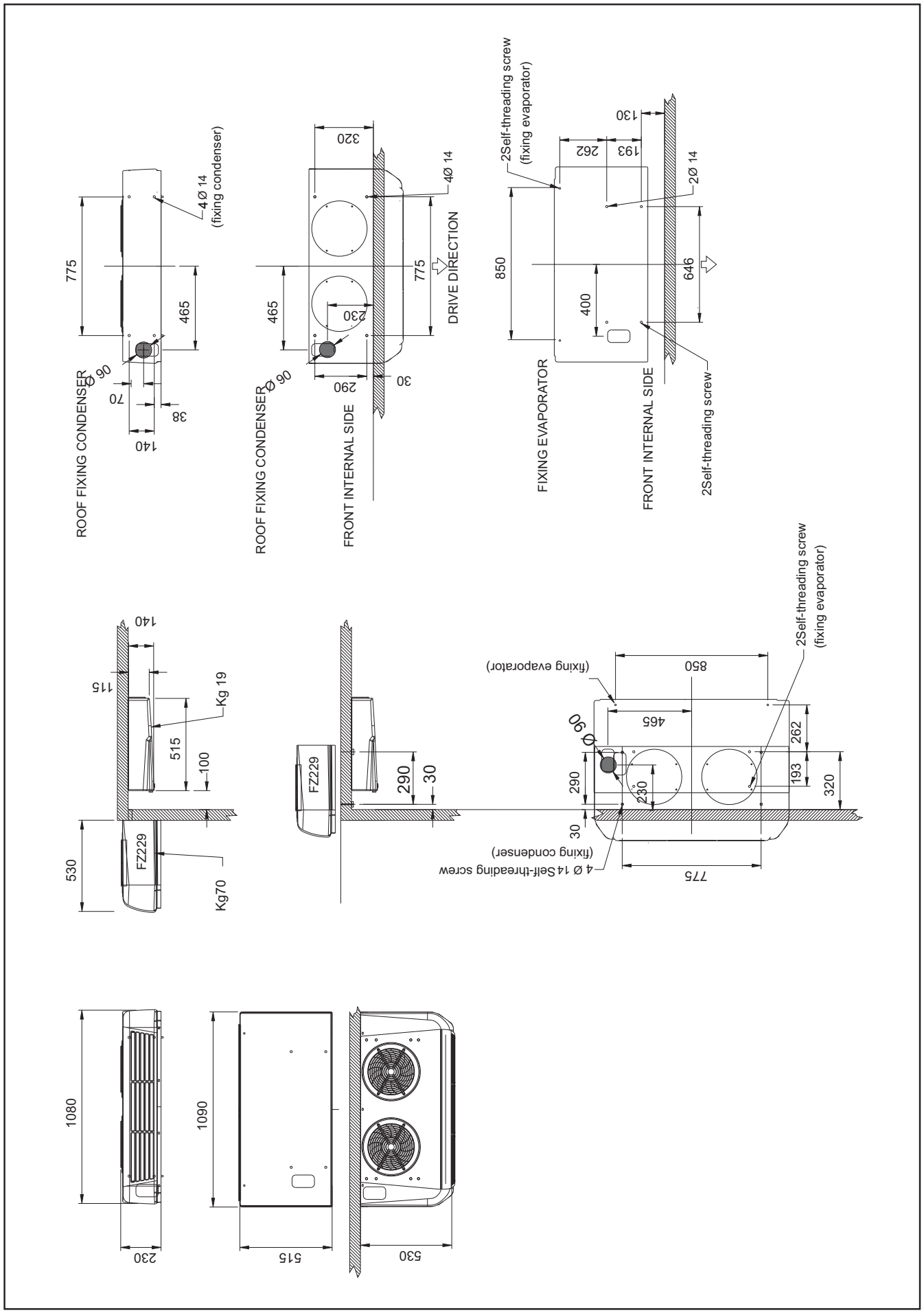
ROOF FIXING CONDENSER
4 Ø 14
(fixing condenser)
775
465
Ø 90
70
38
140
ROOF FIXING CONDENSER
Ø 90
FRONT INTERNAL SIDE
320
4Ø 14
775
465
230
290
30
DRIVE DIRECTION
FIXING EVAPORATOR
2Self-threading screw
(fixing evaporator)
850
400
130
262
193
2Ø 14
646
FRONT INTERNAL SIDE
2Self-threading screw
140
115
Kg 19
515
100
FZ229
530
Kg70
FZ229
290
30
(fixing evaporator)
850
465
Ø 90
290
230
30
262
193
320
2Self-threading screw
(fixing evaporator)
(fixing condenser)
4 Ø 14 Self-threading screw
775
1080
230
1090
515
530

5. *Coolingcircuit and connection details*

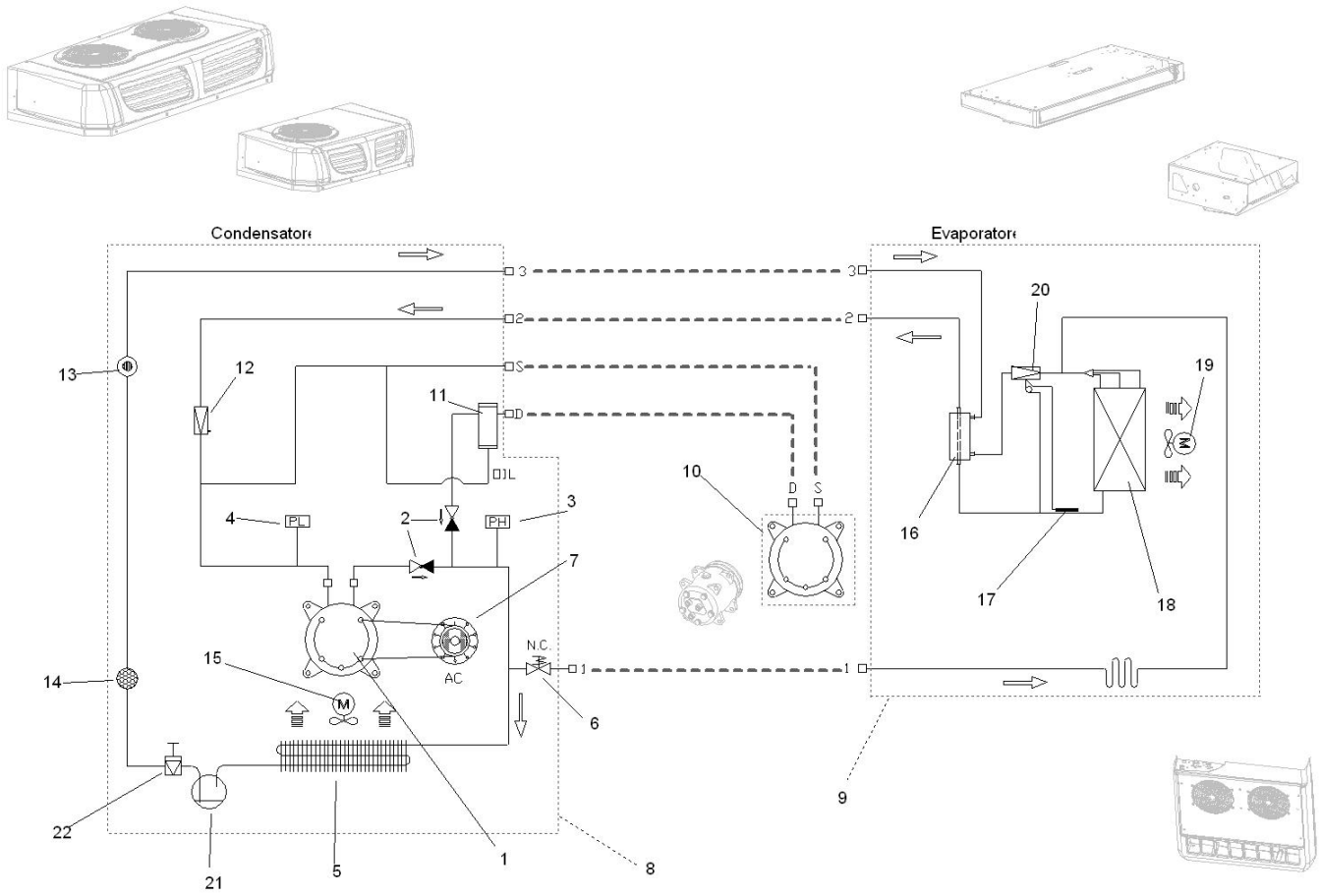

Refrigerant diagram key				
1	Compressor		12	Pressure regulator valve
2	Check valve		13	Liquid sightglass
3	High pressure switch		14	Dehydrator filter
4	Low pressure switch		15	Condenser fan
5	Condenser battery		16	Heat exchanger
6	Solenoid valve		17	Thermostatic bulb
7	Electric motor		18	Evaporatting battery
8	Condensing units		19	Evaporator fan
9	Evaporatorating units		20	Thermostatic valve
10	Compressor		21	Liquid receiver
11	Oil separator		22	Cock

FZ 213 Condensing parts

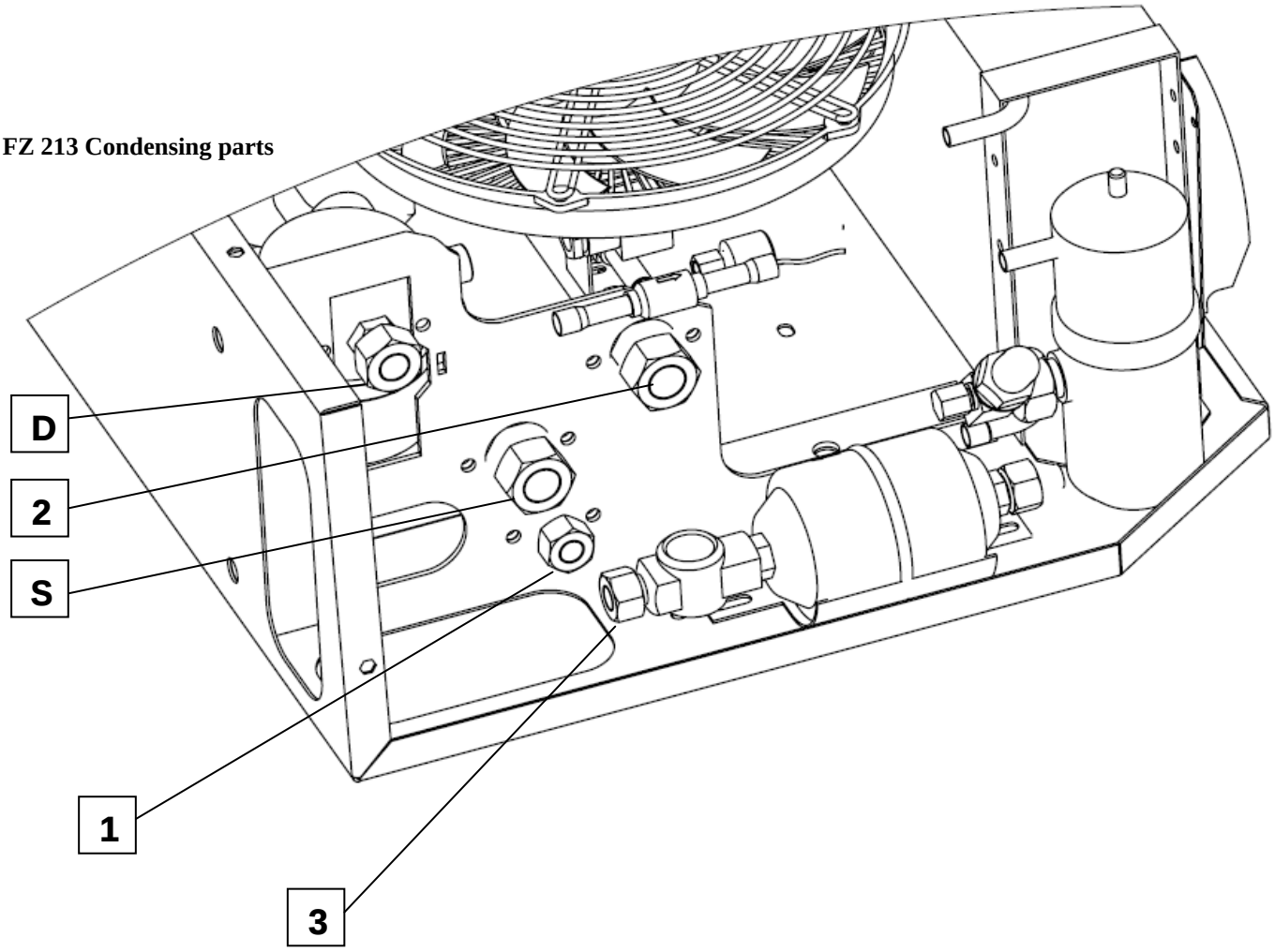

FZ 213 Compressor parts

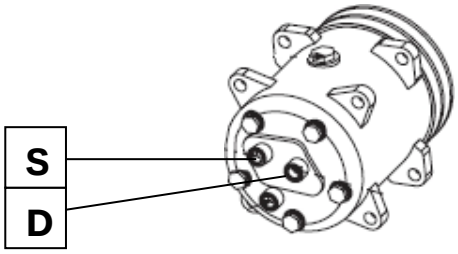

FZ 213 Evaporating parts

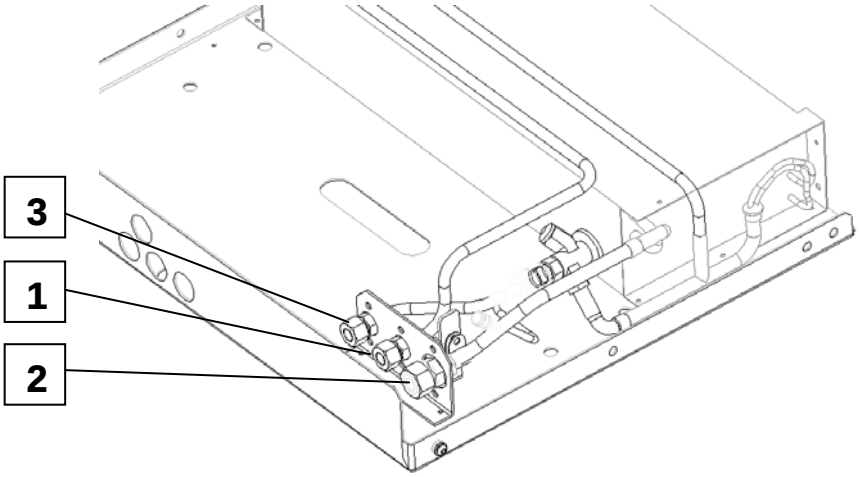

FZ 214 Condensing parts

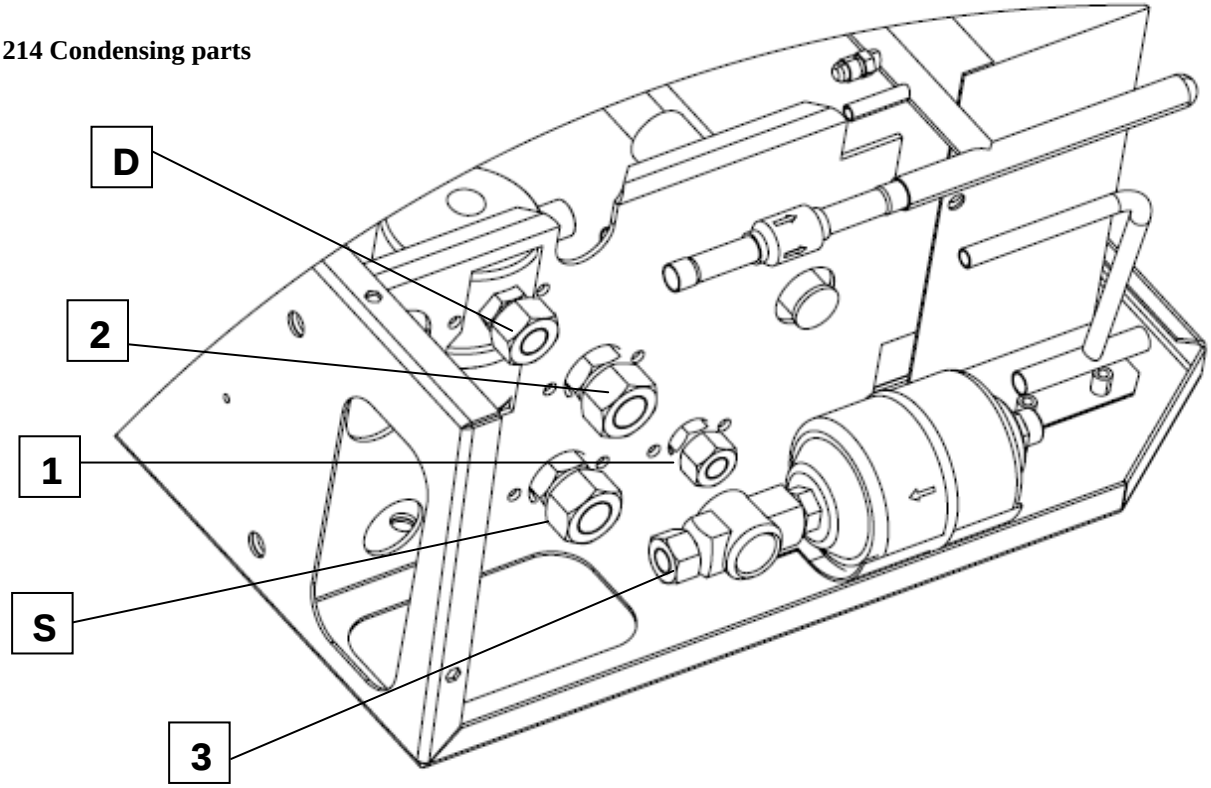

FZ 214 Compressor parts

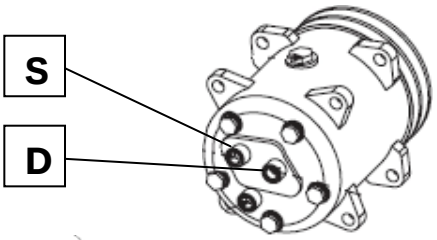

FZ 214 Evaporating parts

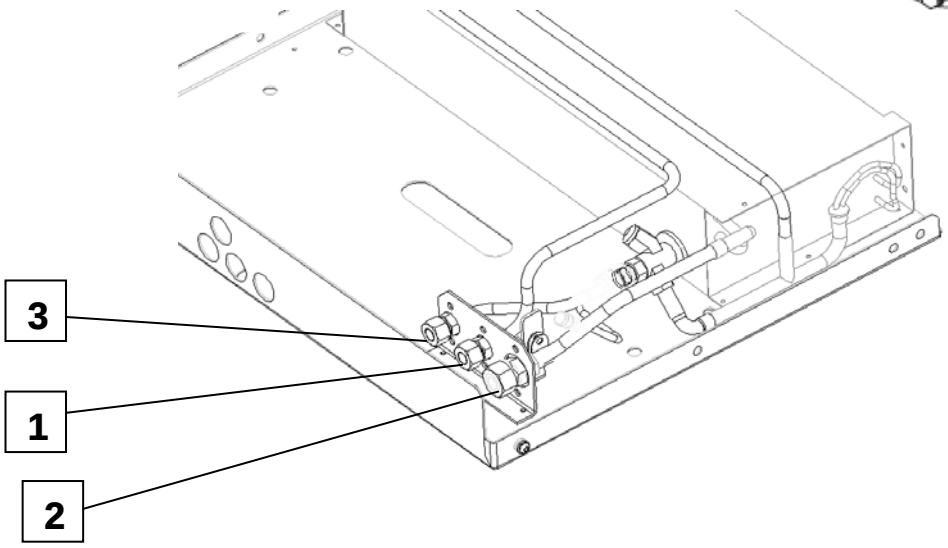

FZ 218 Condensing parts

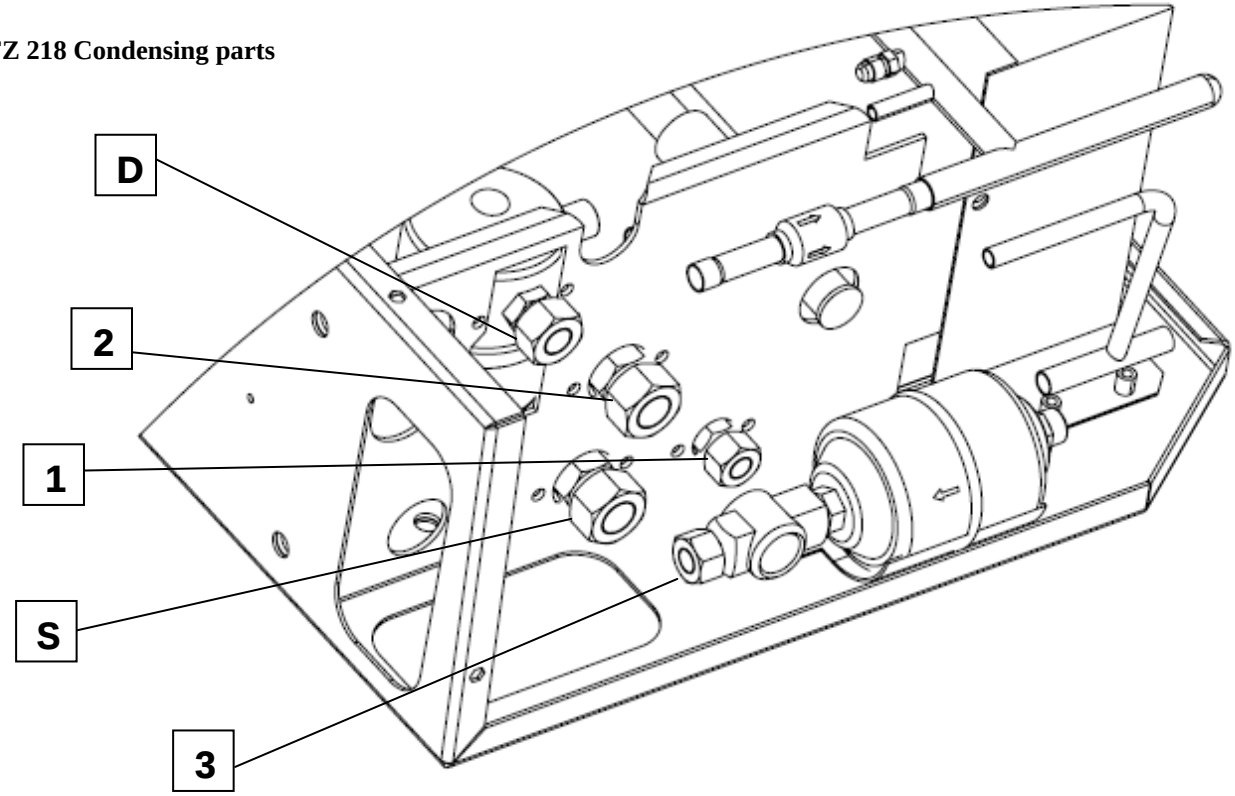

FZ 218 Compressor parts

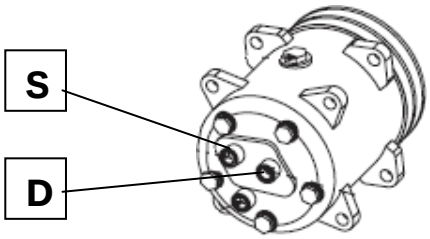

FZ 218 Evaporating parts

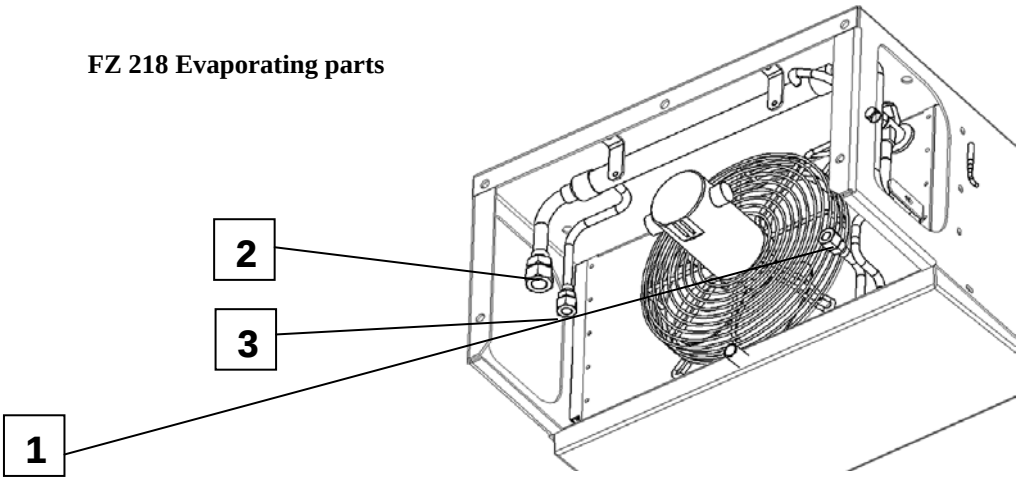

FZ 219 Condensing parts

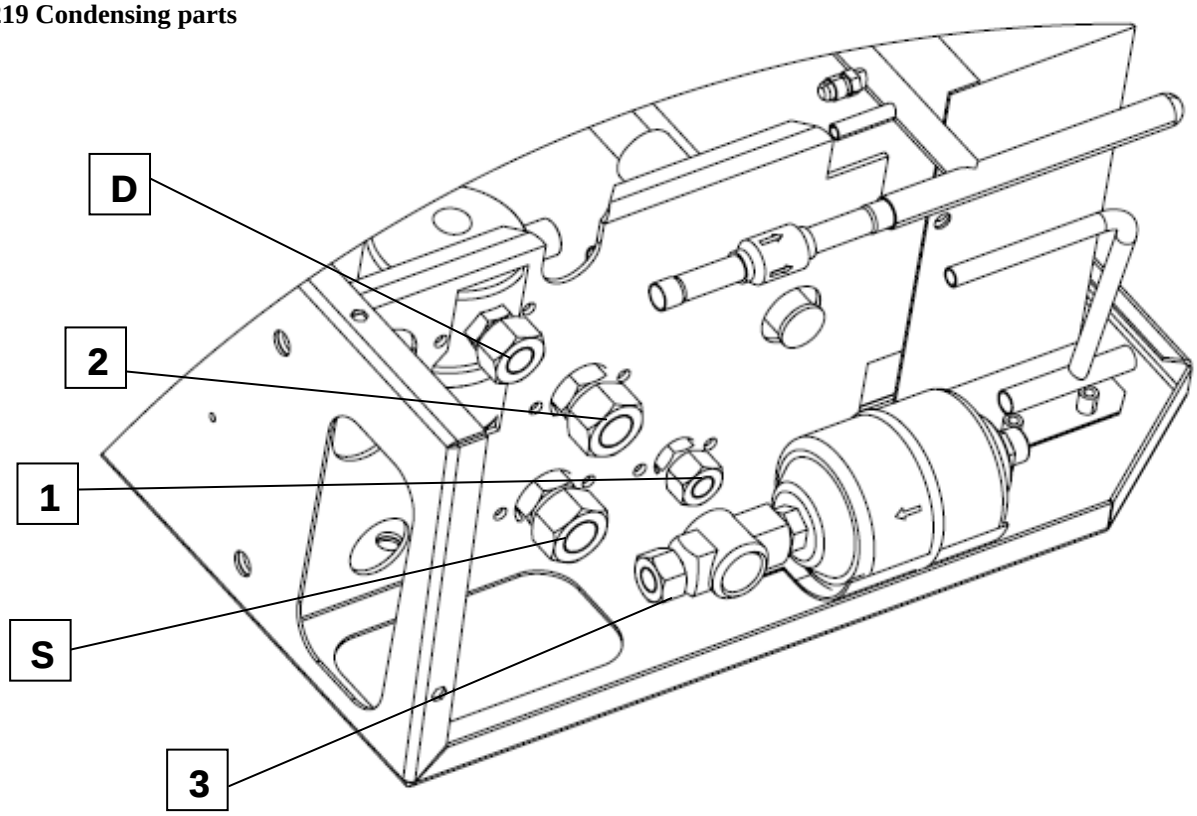

FZ 219 Compressor parts

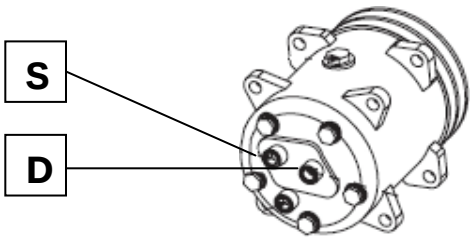

FZ 219 Evaporating parts

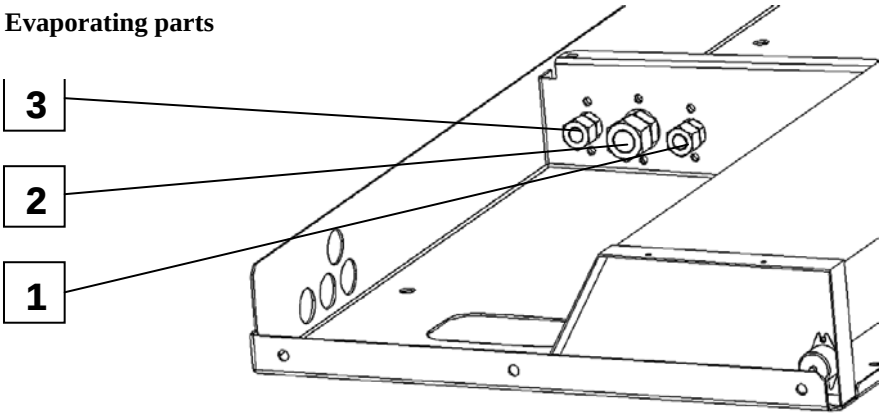

FZ 221 Condensing parts

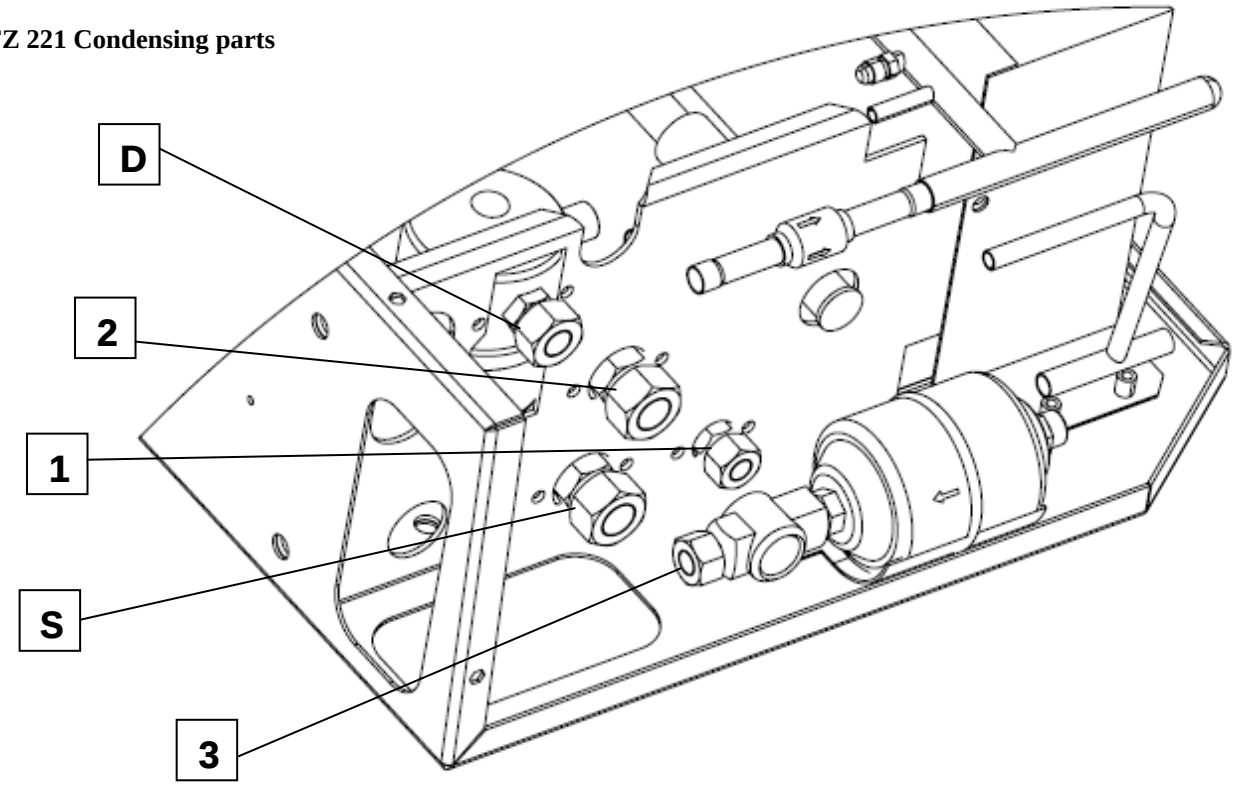

FZ 221 Compressor parts

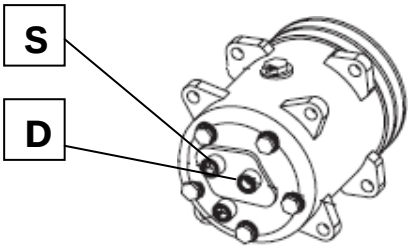

FZ 221 Evaporating parts

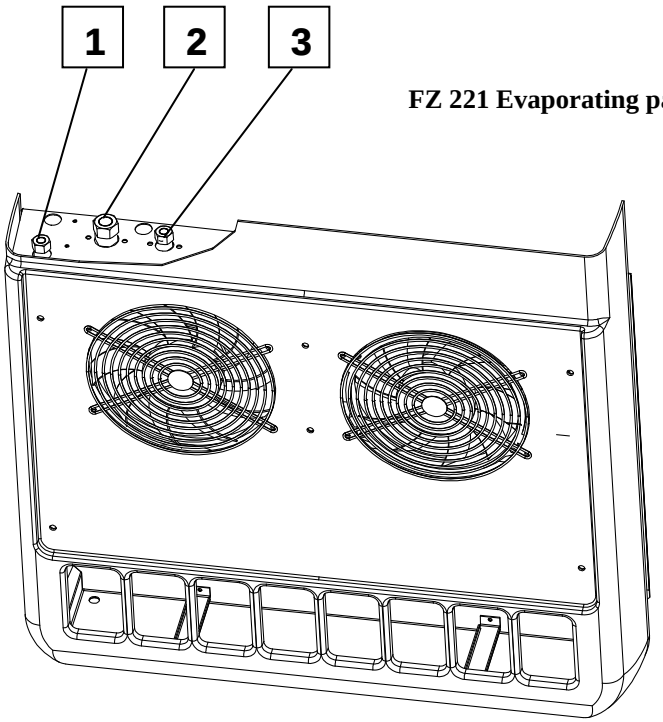

FZ 228 Condensing parts

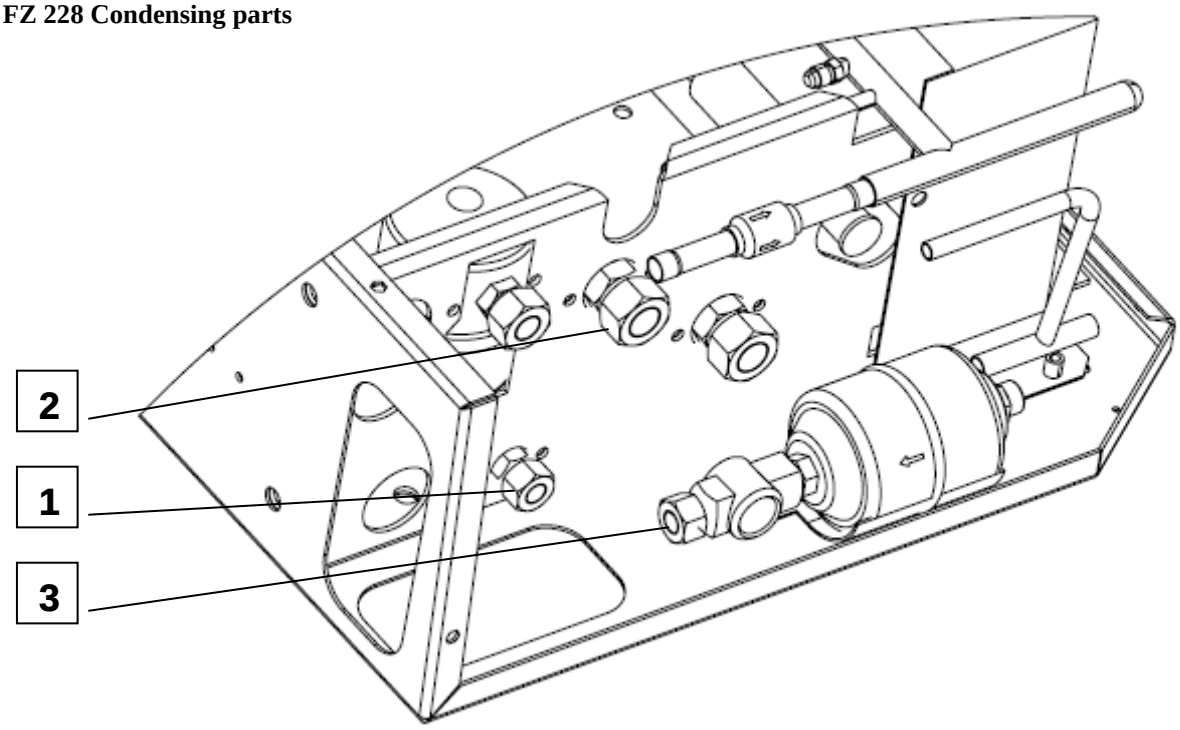

FZ 228 Compressor parts

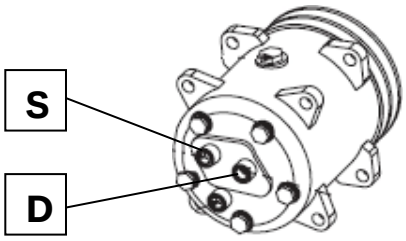

FZ 228 Evaporating parts

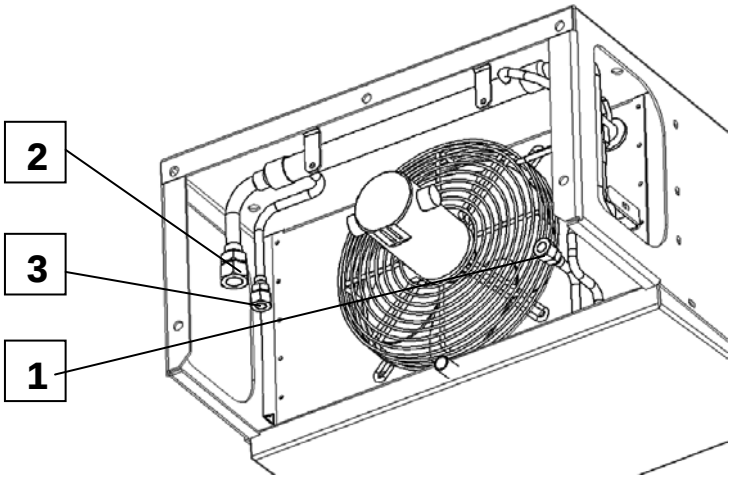

FZ 229 Condensing parts

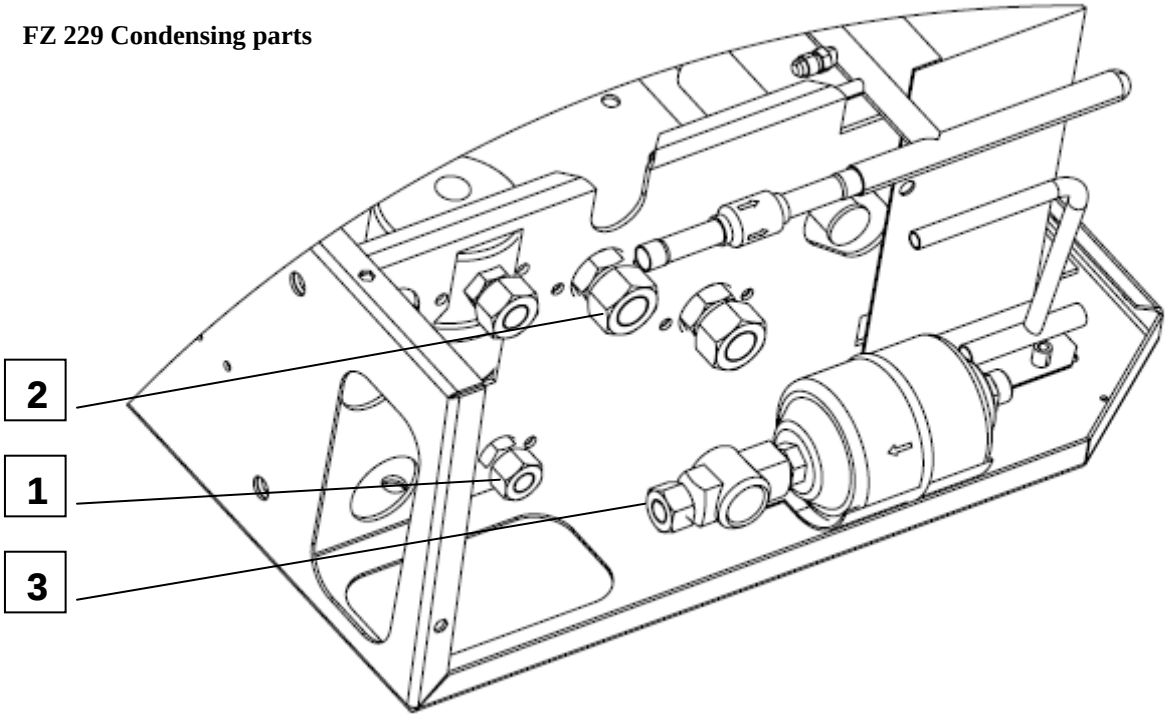

FZ 229 Compressor parts

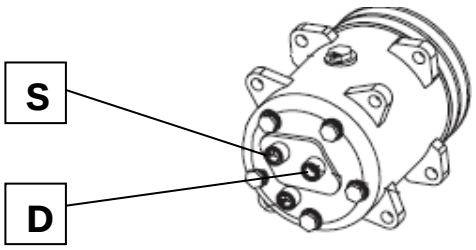

FZ 229 Evaporating parts

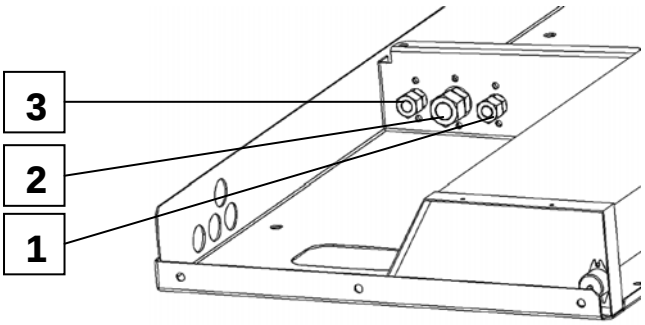

7. Controller description

7.1 Description of the display:

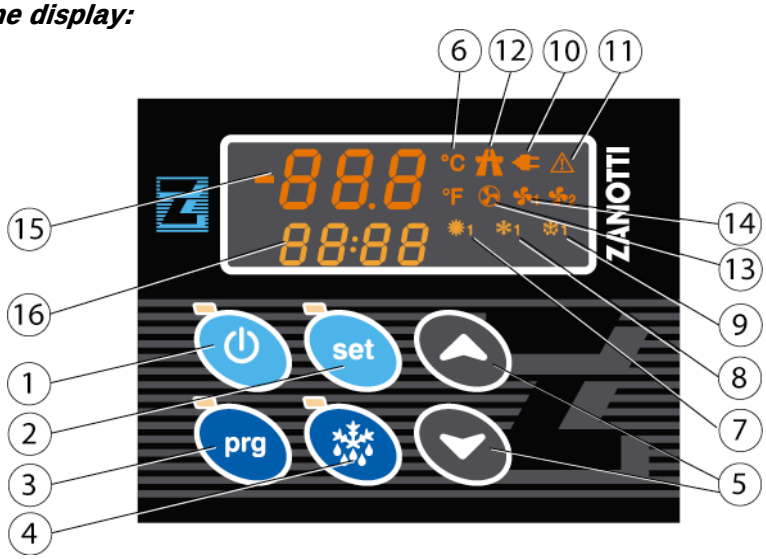

17. ON/OFF button: to switch on/off the unit (press 3 seconds). The red LED lights up when the unit is on.

18. SET button: to set the work set point of the unit. When the LED is on, setting is enabled.

19. PROGRAMMING BUTTON: to access the programming mode (press 5 seconds). When the LED is on, programming is enabled.

20. MANUAL DEFROST BUTTON: press for 5 seconds to start a defrost cycle. When the LED is on, defrost is in course.

21. UP/DOWN buttons to set parameters and set point.

22. LED °C or °F: it shows the unit of temperature measurement adopted for the displayed temperature.

23. HOT MODE LED: it shows that the unit is carrying out the hot cycle.

24. COLD MODE LED: it shows that the unit is carrying out the cold cycle.

25. DEFROST LED: it shows that the unit is carrying out the defrost cycle.

26. STAND-BY LED: it shows that the unit is operating in stand-by mode.

27. ALARM LED: it activates any time an alarm occurs.

28. ROAD LED: it shows that the unit is operating in road mode.

29. CONDENSER FAN LED: it shows that the condenser fan is operating.

30. EVAPORATOR FAN LED: it shows that the evaporator fan is operating.

31. DISPLAY: it shows the cold room temperature.

32. DISPLAY: it displays the alarms.

7.2. Setting the work set point:

Press the SET button: on the red display the current value flashes and Set1 appears on the yellow display; press the up/down buttons to change the current value. Press SET again or wait 10 seconds to save the new value.

7.3 Programming the parameters

To enter the programming mode press prg for 5 seconds. The first parameter is reached, whose label is shown on the yellow display and value on the red display.

To change a parameter, use the up/down buttons to reach the parameter desired. Press the SET button, the current value flashes, use the up/down buttons to set the new value. Then press SET again to go to the following parameter. Wait 10 seconds to leave the programming mode automatically.

LABEL	DESCRIPTION	Cold	Heat/Cold	Heat pump
Set	Set point			
Set2	Set point 2			
FuS	Operating modes: CL = cold, C-H = cold/heat, HPU= heat pump	CL	C-H	HPU
Dt	Hysteresis	2	2	2
IS	Min. set point	-20	-20	-20
SS	Max. set point	30	30	30
oF	Sensor calibration	0	0	0
AL	Low temperature alarm	5	5	5
AH	High temperature alarm	30	30	30
dA	Alarm differential	2	2	2
SA	Alarm cut out at power on	4	4	4
ALd	Temperature alarm delay	30	30	30
Tdf	Defrost mode	Std	Std	Std
dS	Max defrost time	5	5	5
Fdt	Dripping time	0	0	0
Fnd	Fan delay after defrost	1	1	1
EdA	Alarm cut out after defrost	30	30	30
Sd	Anti-short cycle (standby mode only)	2	2	2
dF	Interval between defrosts	3	3	3
dFd	Display during defrost	it	it	it
dAd	Display delay after defrost	30	30	30
Bt	Battery voltage selection	12/24	12/24	12/24
PAb	Differential for battery voltage pre-alarm	0,7/1,5	0,7/1,5	0,7/1,5
Ab	Differential for battery voltage alarm	1,5/3	1,5/3	1,5/3
Abd	Differential for battery alarm	0,8/1,5	0,8/1,5	0,5/1,5
tF	Standby clutch delay	5	5	5
	Standby clutch delay (only for FZ213)	*0	*0	*0
bb	Start delay after alarm Ab	1	1	1
tS	Temperature measurement unit	C	C	C
rES	Display of integer / decimal number	de	de	de
LPP	Input polarity of low pressure switch	OP	OP	OP
LPn	Number of interventions of low pressure switch	10	10	10
LPd	Interval between interventions of low pressure switch	60	60	60
HPP	Input polarity of high pressure switch	OP	OP	OP
HPn	Number of interventions of high pressure switch	10	10	10
HPd	Interval between interventions of high pressure switch	60	60	60
dFP	Input polarity of defrost end	CL	CL	CL
HtP	Input polarity of overload relay	OP	OP	OP
Htn	Number of interventions of overload relay	3	3	6
Htd	Interval between interventions of overload relay	60	60	60
Htt	Start delay after overload relay intervention	2	2	15
HOP	Output polarity of 4-way valve (heat pump)	CL	CL	CL

8. Operation

8.1 Operation in road mode:

Check that the punctiform LED on the display is on, showing that the unit is on. Start the vehicle engine and press the ON button for 3 seconds. Attention: when the vehicle is not in motion the refrigerating unit can not be used in road mode. The operation and road icons light up.

To stop the refrigerating unit press the on/off button or stop the vehicle.

8.2. Operation in stand-by mode:

Check that supply voltage corresponds to the one shown in the data plate (tolerance: +/-10% on nominal voltage), then insert the plug.

Press the ON button for 3 seconds: the operation and standby icons light up; the red display shows the cold room temperature and the yellow display the set point. To stop the refrigerating unit press the on/off button.

8.3. Automatic operation:

After starting the unit operates automatically and it stops any time the cold room temperature reaches the set point; it resumes operation when temperature reaches a value corresponding to set point + differential.

According to the model, the refrigerating unit can show different operating modes which give rise to the activation of different icons:

- cold mode: activated icons - 1 - 1
- hot mode: activated icons 1 - 1

In addition to these icons the road or standby icon, or , will also be activated.

8.4. Defrost:

The defrost cycle is activated automatically at intervals, or manually by pressing the defrost button. During this cycle the icons 1 and 1 light up.

In the operating mode with heat pump, evaporator and condenser exchange their functions; for this reason the icons activating during defrost can also be 1 and 1, depending on the defrost cycle involving the evaporator or the condenser.

In the operating mode with heat pump the defrost cycle ends by time out.

8.5 Alarms and warnings

Low pressure switch alarm

When the low pressure switch trips, the unit stops: the alarm LED lights up and the label PRL is displayed. Reset is automatic. If the number of interventions is higher than parameter LPn during the time set by parameter LPd, the alarm PMI is produced. This alarm can only be reset by switching the unit off and on again.

High pressure switch alarm

When the high pressure switch trips, the unit stops: the alarm LED lights up and the label PRH is displayed. Reset is automatic. If the number of interventions is higher than parameter HPn during the time set by parameter HPd, the alarm PMS is produced. This alarm can only be reset by switching the unit off and on again.

Overload relay alarm

This alarm is only active when the unit operates in standby mode. When the relay or the thermistor trips, the unit stops. The alarm LED lights up and the label F1t is displayed. Regulation is resumed after reset and a time Htt. If the number of interventions is higher than parameter Htn during the time set by parameter Htd, the alarm FTB is produced. This alarm can only be reset by switching the unit off and on again.

Sensor failure alarm

Label E01 is displayed and the alarm LED is activated. The unit stops.

High/Low temperature alarm

Alarms are produced when the actual temperature goes out of a certain range determined on the basis of the set point.

In case of low temperature the alarm LED lights up and LA is displayed; in case of high temperature the alarm LED lights up and HA is displayed.

Battery voltage alarm

This alarm is only active when the unit operates in road mode. If battery voltage (sensored on key introduction) is lower than the value bt-Pab, a preliminary alarm PAb is activated which just indicates that there is an anomaly. Should voltage drop down to a value corresponding to bt-Ab, the battery alarm AB is produced and the unit is stopped. In addition to above labels the battery icon is activated.
The unit resumes operation after voltage has reached its correct value and time bb has elapsed.

Supply alarm

This alarm is produced when both road and standby signals are present. The alarm stops the refrigerating unit; ALM is displayed and the standby and road icons flash.

9. Wiring diagram

A wiring diagram, specific for the units of the FZ series, is enclosed with these use and maintenance instructions.

10. How to order spare parts

When ordering spare parts make reference to the number written on the unit plate.

WARNING
Worn parts should be replaced only by qualified personnel or by the manufacturer.

11. How to dispose the packing

Wooden, plastic, polystyrene packing shall be disposed of according to the regulations in force in the country where the unit is used.

12. How to dispose the unit

Do not discharge scrapped components in the environment. They should be disposed of by companies dealing with special waste collection and recovery, according to the regulations in force in the country where the unit is used.

WARNING
Do not discharge the refrigerant in the atmosphere. It should be disposed of by companies dealing with special waste collection and recovery.

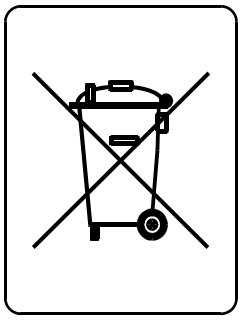

13. Wiring diagram

BA
ROOM PROBE
C
RECTIFICATION CAPACITOR
CM
RUN CAPACITOR
CS
START CAPACITOR
E0
HEATER
E
DISCHARGE HEATER
F1
M1 MOTOR FUSE
F1E
ELECTRONIC CONTROL PANEL
F1T
OVERLOAD RELAY
F1TR
THERMISTOR
F6
CONDENSER FAN FUSE
F6/1
CONDENSER FAN FUSE
F8
EVAP. FAN FUSE
F9
EVAP. FAN FUSE
F10
EVAPORATOR FAN FUSE
F11
DEFROST SOLENOID FUSE
FFR
STAND-BY CLUTCH FUSE
FFS
ROAD CLUTCH FUSE
FGR
STAND BY GENERAL FUSE
FGS
ROAD GENERAL FUSE
FS
TRANSFORMER FUSE
FB
BATTERY INPUT FUSE
FR
MAINS INPUT FUS
FSS
DEFROST SOLENOID FUSE
FTS
DEFROST TERMINATION THERMOSTAT
K1
M1 MOTOR CONTACTOR OR RELAY
K11
DEFROST CONTACTOR OR RELAY
K2
PHASE REVERSAL MOTOR M1 CONTACTOR

K39
TIMER FOR MAINS FEEDER DELAY
K5
COND FAN CONTACTOR OR RELAY
K8
EVAP.FAN CONTACTOR OR RELAY
K8A
EVAP.FAN CONTACTOR OR RELAY
K8B
EVAP.FAN CONTACTOR OR RELAY
KFA
LOW TEMP. AUXILIARY RELAY
KFB
LOW TEMP. AUXILIARY RELAY
KAV
START RELAY
KB
BATTERY RELAY
KF
STAND BY/ROAD CLUTCH RELAY
KIC
COND.C STARTING RELAY
KMC
DIRECT CURRENT MOTOR RELAY
KR
STAND-BY RELAY
KCA
AUXILIARY RELAY HEATING CYCLE
KCB
AUXILIARY RELAY HEATING CYCLE
KRV
STAND-BY CLUTCK TIMER
KSF
PHASE SEQUENCE RELAY
M1
ELECTRIC MOTOR
M5
COND.FANMOTOR
M6
COND.FAN MOTOR
M8
EVAP.FAN MOTOR
M9
EVAP.FAN MOTOR
M10
EVAP.FAN MOTOR
M11
EVAP.FAN MOTOR
MCC
DIRECT CURRENT MOTOR
P1MX
COND.FAN STARTING PRESSURE SWITCH
PMI

LOW PRESSURE SWITCH
PMX
HIGH PRESSURE SWITCH

TAL
TRANSFORMER
TK
THERMO-CONTACT
X
MAIN CONNECTOR
YC
SOLENOID HEATING CYCLE
YF
SOLENOID CYCLE REVERSAL
YFH
ROAD CLUTCH
YFR
STAND-BY CLUTCH
YI
INJECTION SOLENOID
YS
HOT GAS SOLENOID

Zanotti S.p.A.
Via M.L. King, 30 - 46020 Pegognaga (MN) Italy
Tel. 0376.5551 - Fax 0376.536554
Info@zanotti.com - www.zanotti.com

0MAN117/N
09/2008