TRE-3000 • 12V • +0˚C • p.n. 3730-854
TRE-3001 • 24V • +0˚C • p.n. 3730-855
TRE-3002 • 12V • -20˚C • p.n. 3730-874
TRE-3003 • 24V • -20˚C • p.n. 3730-875

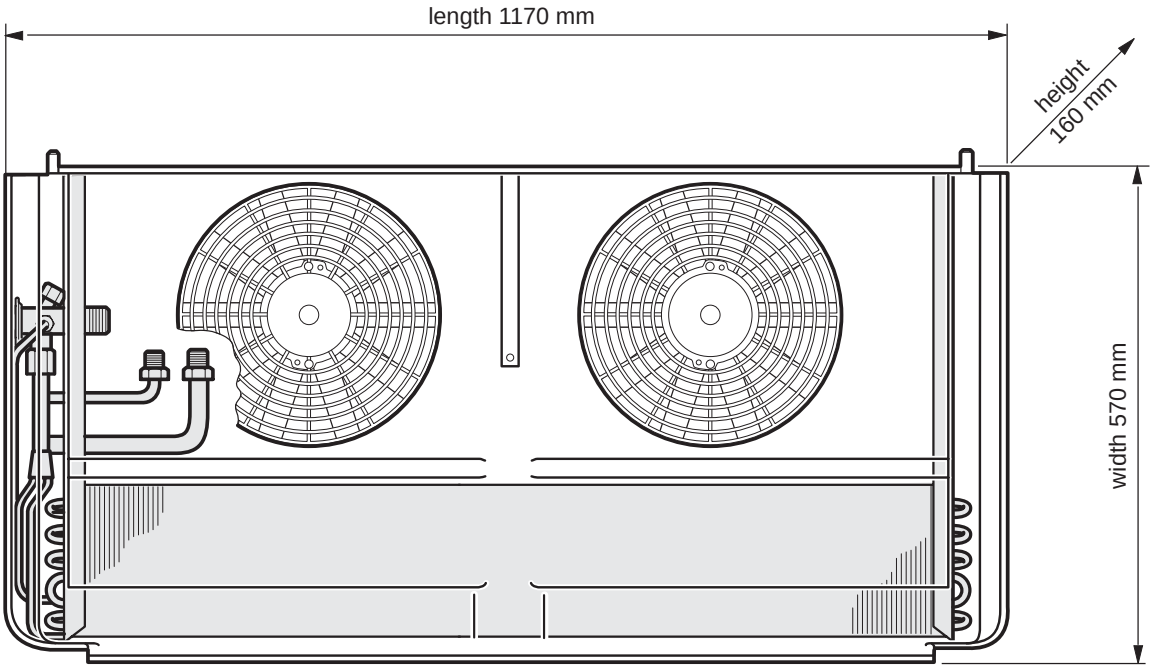

NOMINAL TECHNICAL DATA:

Refrigeration Capacity (at Ambient Temperature 30˚C) :
+0˚C : 2790W / -20˚C : 1392W
Power Consumption : 12A - 12V / 6A - 24V
Airflow : 1560 m^3/h
Weight : 14 Kg
ATP : T - 2003 / 1113

TRE-3001

TRANSPORT REFRIGERATION EVAPORATOR

24 VOLT

OPERATING TEMPERATURE: +0˚C

P.N. 3730-855

TRC-3000 & TRE-3000

12V & 24V

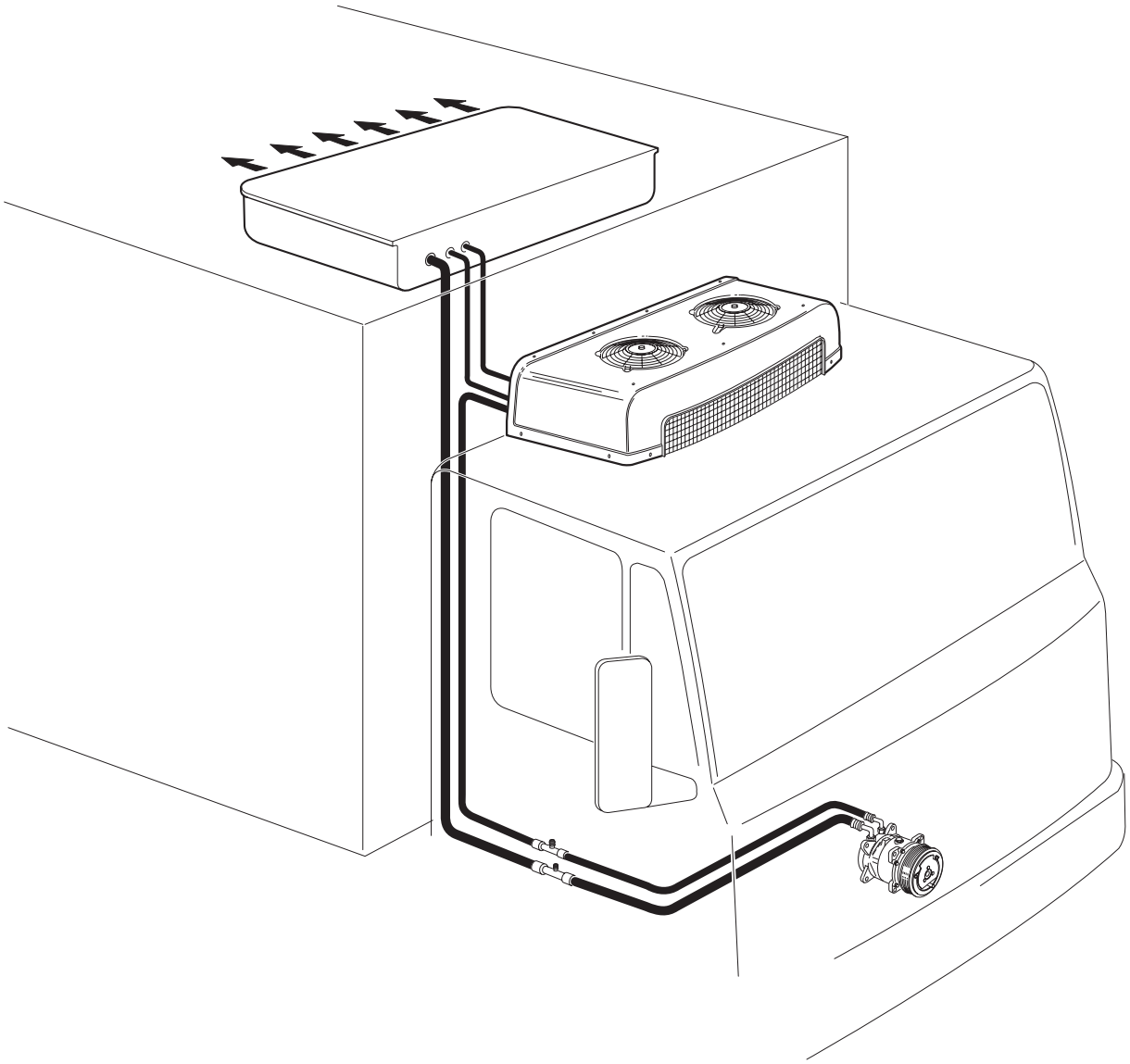

	FOR +0˚C	*FOR -20˚C*
Refrigeration capacity at ambient temperature 30˚C	2790w	1392w
Maximum volume of cooling box	26m^3	15.5m^3
Refrigerant	R-134a	404a or 507
Refrigerant charge	1800±100gr.	2200±100gr.
Oil charge In addition to the existing oil in the compressor	110cc	110cc
Condenser's power consumption	12A -12V, 6A -24V	12A -12V, 6A -24V
Evaporator's power consumption	12A -12V, 6A -24V	12A -12V, 6A -24V
Evaporator's air flow	1560m^3/h	1560m^3/h
Condenser's weight	18.5Kg	18.5Kg
Evaporator's weight	14.0Kg	14.0Kg

TRE-3000•24V•3730-855

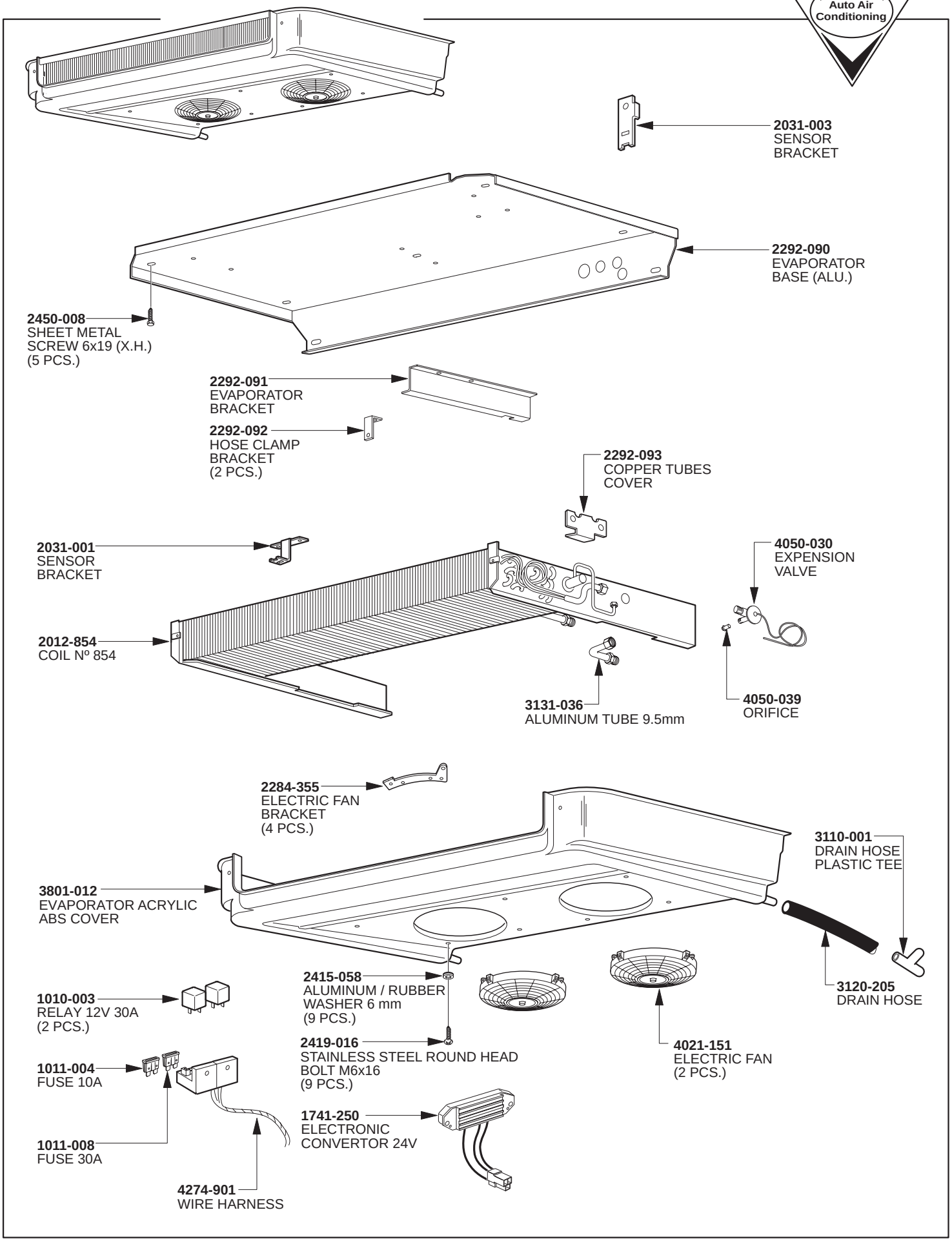

ELECTRONIC DIGITAL CONTROLLER•12V & 24V•1050-324

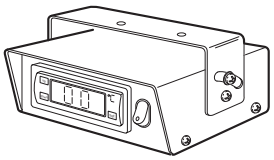

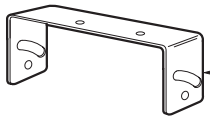

2292-094
CONTROLLER BRACKET

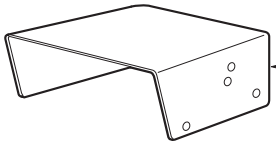

2292-095
CONTROLLER COVER

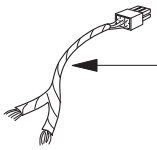

4285-029
WIRE HARNESS

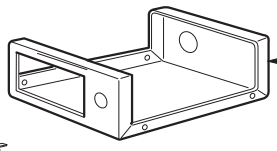

2292-130
CONTROLLER BASE

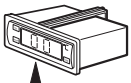

1050-321
ELECTRONIC
CONTROLLER

1050-804
ON/OFF SWITCH

NOTE:
- CONTROLLER BRACKET CAN BE MOUNTED ON TOP OR ON BOTTOM OF BASE.
- CONTROLLER & SWITCH CAN BE MOUNTED IN DASHBOARD WITHOUT USING THE BASE, COVER & BRACKET.

DIMENSIONS OF EVAPORATOR'S COVER

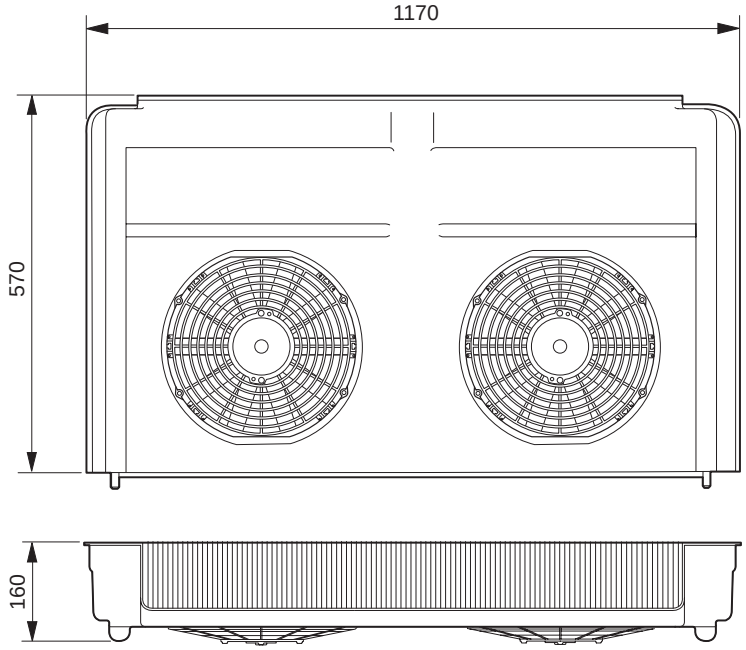

DIMENSIONS OF EVAPORATOR WITHOUT COVER

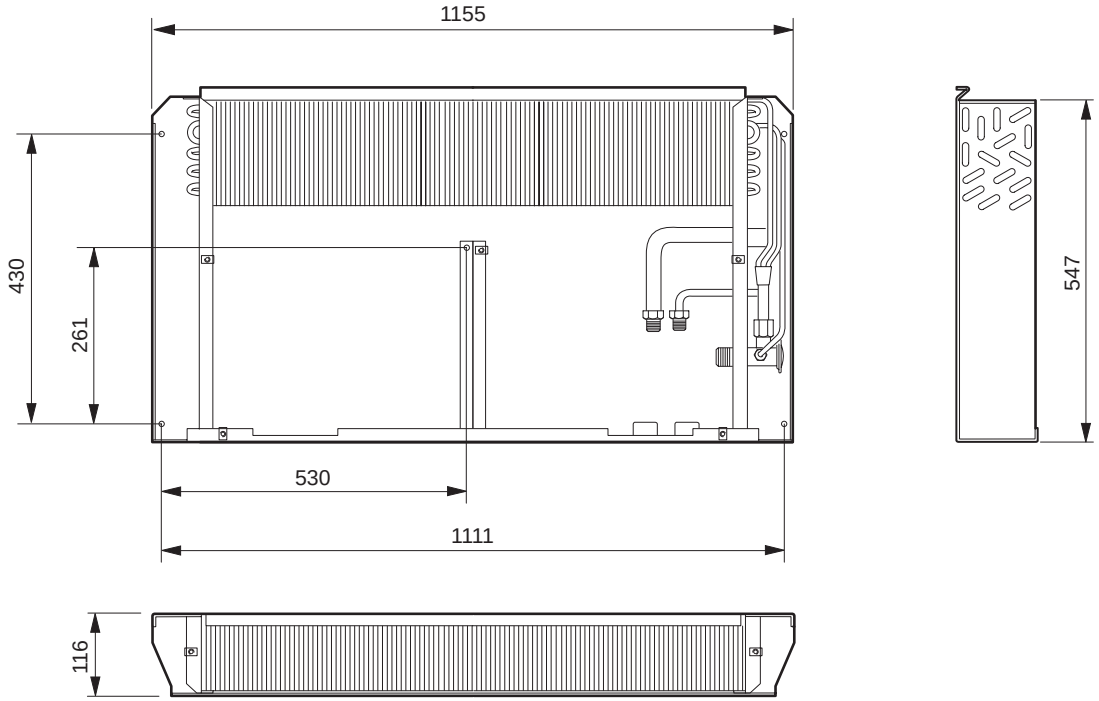

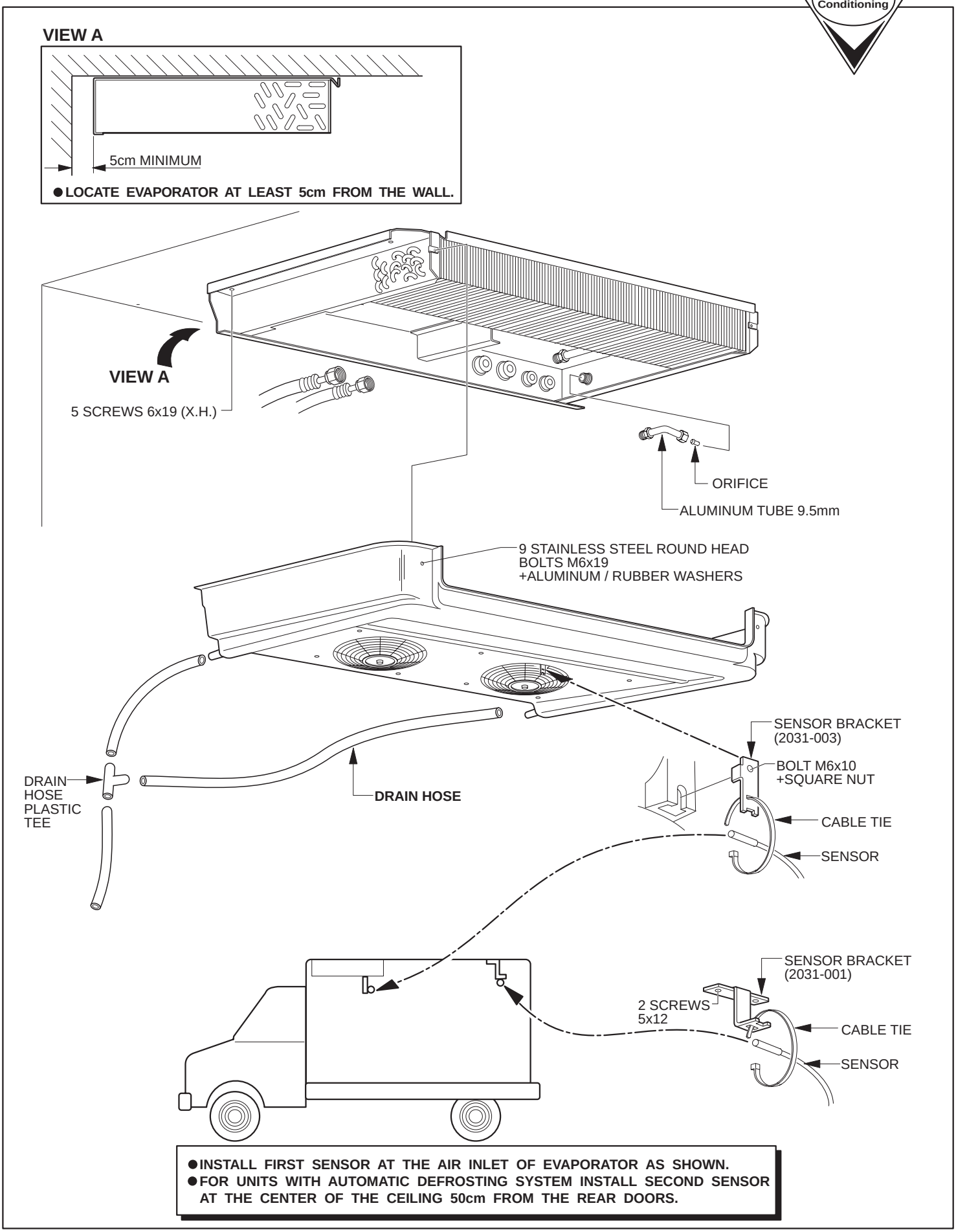

●INSTALL FIRST SENSOR AT THE AIR INLET OF EVAPORATOR AS SHOWN.
●FOR UNITS WITH AUTOMATIC DEFROSTING SYSTEM INSTALL SECOND SENSOR AT THE CENTER OF THE CEILING 50cm FROM THE REAR DOORS.

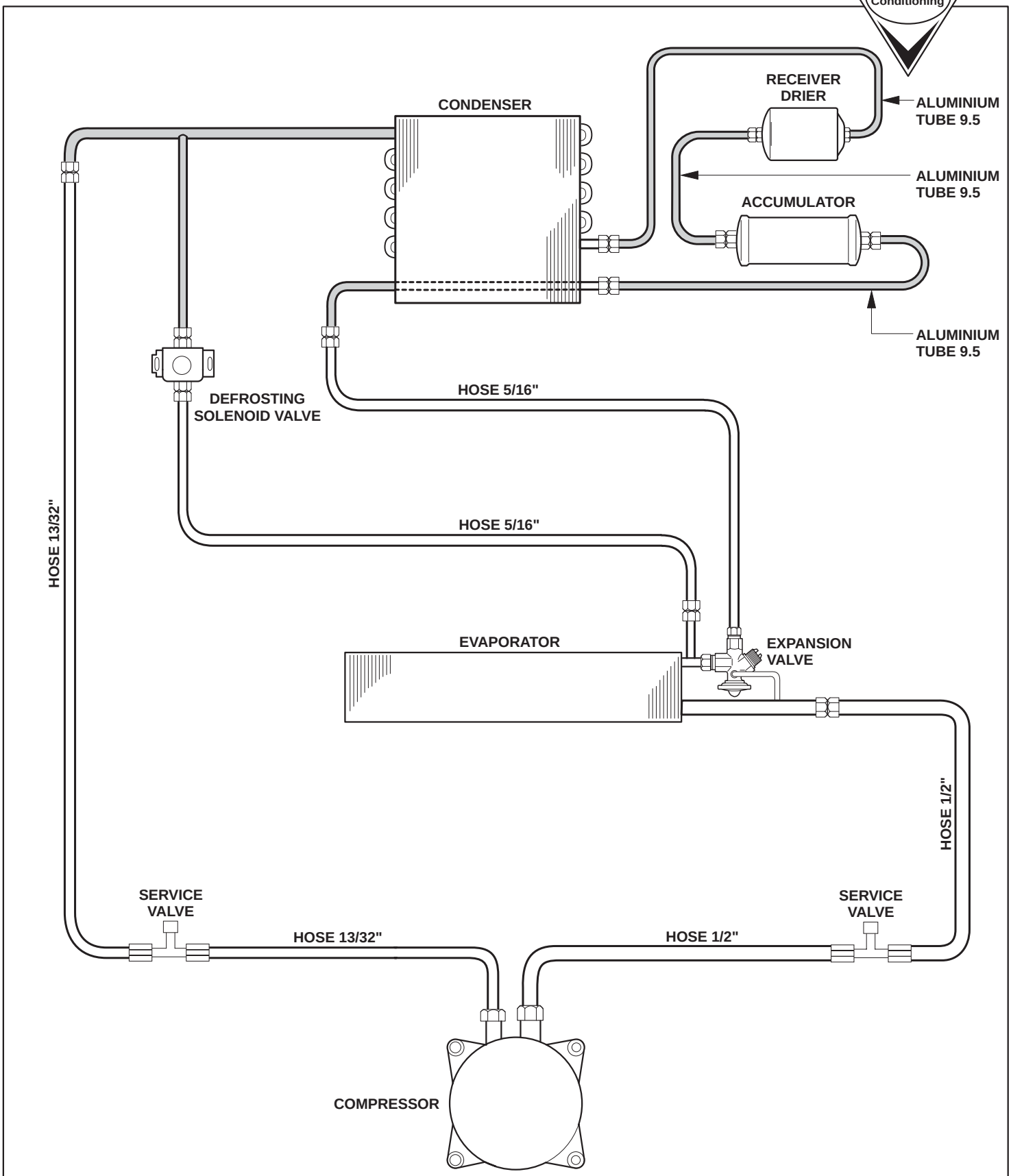

IMPORTANT (ESPECIALLY WHEN USING REFRIGERANT 404A OR 507):
AFTER VACUUMING THE SYSTEM, FILL IT UP AS MUCH AS POSSIBLE THROUGH THE CHARGE HOSE 13/32" WHILE THE ENGINE IS SHUT OFF.
ONLY THAN FILL UP THE REMAINING AMOUNT OF GAS NEEDED THROUGH THE SUCTION HOSE 1/2" WHILE THE ENGINE IS RUNNING AT 1500 R.P.M. AND THE REFRIGERATION SYSTEM IS WORKING IN FULL CAPACITY.

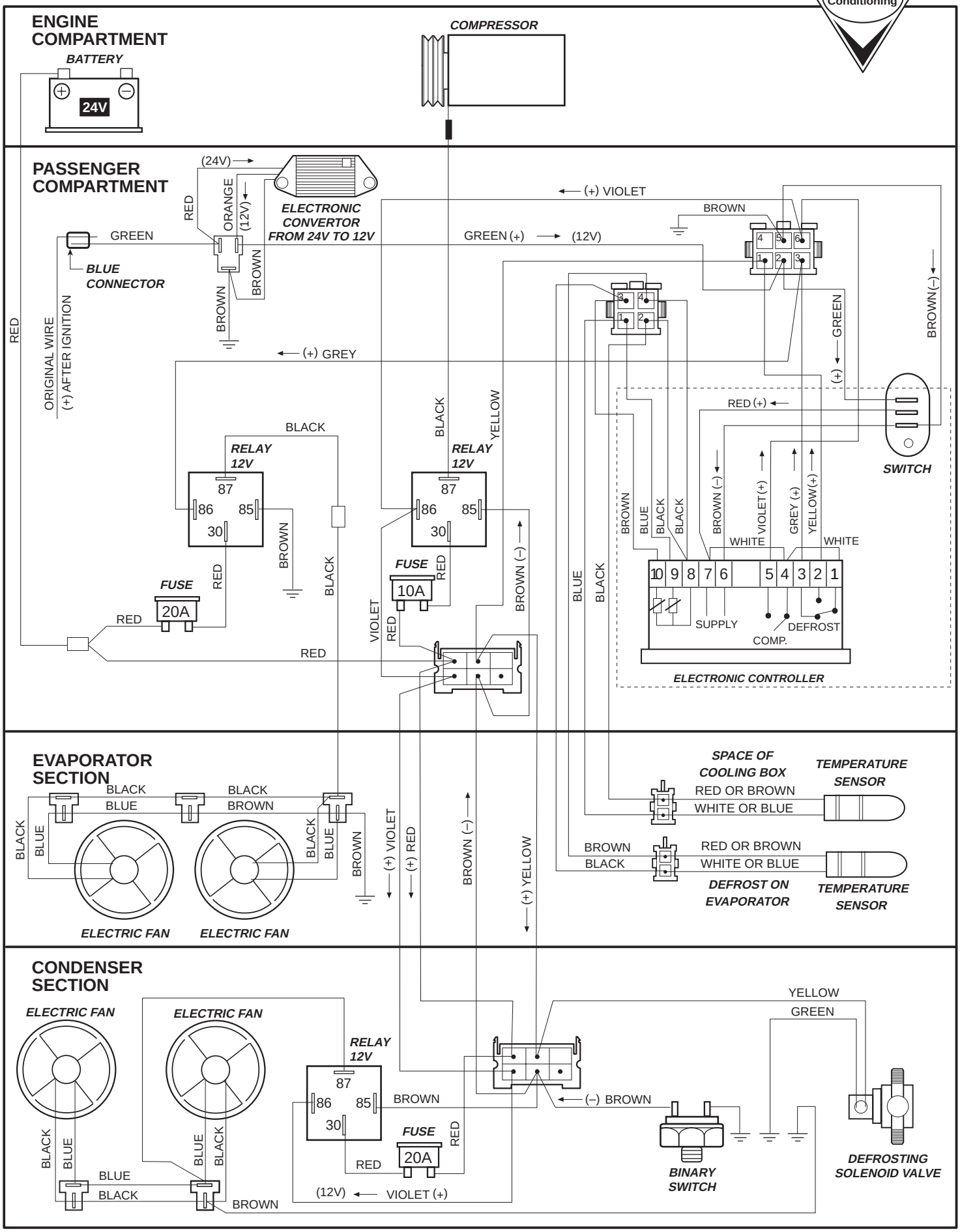
ENGINE COMPARTMENT
BATTERY
24V
COMPRESSOR
PASSENGER COMPARTMENT
(24V)
RED
ORANGE
(12V)
ELECTRONIC CONVERTOR FROM 24V TO 12V
(+) VIOLET
BROWN
GREEN
BLUE CONNECTOR
GREEN (+)
(12V)
BROWN
BROWN
RED
ORIGINAL WIRE
(+) AFTER IGNITION
(+) GREY
GREEN
(+)
BROWN (–)
RED (+)
SWITCH
BLACK
YELLOW
RELAY 12V
87
86
85
30
FUSE
20A
10A
RED
VIOLET
BROWN (–)
BLUE
BLACK
BROWN
BLUE
BLACK
BLACK
BROWN (–)
VIOLET (+)
GREY (+)
YELLOW (+)
WHITE
WHITE
10 9 8 7 6 5 4 3 2 1
SUPPLY
COMP.
DEFROST
ELECTRONIC CONTROLLER
EVAPORATOR SECTION
BLACK
BLUE
BLACK
BROWN
BLACK
BLUE
BROWN
(+) VIOLET
(+) RED
BROWN (–)
(+) YELLOW
ELECTRIC FAN
ELECTRIC FAN
SPACE OF COOLING BOX
TEMPERATURE SENSOR
RED OR BROWN
WHITE OR BLUE
BROWN
BLACK
RED OR BROWN
WHITE OR BLUE
DEFROST ON EVAPORATOR
TEMPERATURE SENSOR
CONDENSER SECTION
ELECTRIC FAN
ELECTRIC FAN
RELAY 12V
87
86
85
30
BROWN
FUSE
20A
RED
RED
(12V)
VIOLET (+)
BLACK
BLUE
BLUE
BLACK
BLUE
BLACK
BROWN
(–) BROWN
YELLOW
GREEN
BINARY SWITCH
DEFROSTING SOLENOID VALVE